February 20, 2002

NOMINATION OF WELDING FUMES

FOR TOXICITY STUDIES

National Institute for Occupational Safety and Health

EXECUTIVE SUMMARY

It is estimated that over 400,000 workers are employed in the U. S. as welders, cutters, solderers, and brazers. An estimated 800,000 workers are employed full-time as welders worldwide. Still much larger numbers, believed to be more than one million, perform welding intermittently as part of their work duties. Large numbers of welders experience some type of adverse health effect. Respiratory effects seen in full-time welders have included bronchitis, airway irritation, metal fume fever, lung function changes, increased susceptibility to infection, and a possible increase in the incidence of lung cancer. Even less information is available about the systemic and dermal effects after welding fume exposure.

Welding provides a powerful manufacturing tool for high quality joining of metallic components. Essentially, all metals and alloys can be welded; some with ease, others requiring special precautions. Approximately 80 different types of welding and allied processes for commercial use have been identified. Each method has its own particular metallurgical and operational advantages, and each may present its own potential health and safety hazard. Thus, welders are not a homogeneous group, working in a variety of workplace conditions.

Welding joins pieces of metal that have been made liquid by heat produced as electricity passes from one electrical conductor to another. Extremely high temperatures in the arc heat both the base metal pieces to be joined and a filler metal coming from a consumable electrode wire. Most of the materials in the welding fume comes from the consumable electrode, which is partially volatilized in the welding process. Vaporized metals react with air, producing metal oxides which condense and form fumes consisting of particles that are of respirable size.

There is no material from any other source directly comparable to the composition and structure of welding fumes. Welding is considered a dangerous occupation because: (1) there are a multiplicity of factors that can endanger the health of a welder, such as heat, burns, radiation, noise, fumes, gases, and electrocution; and (2) the high variability in chemical composition of welding fumes which differs according to the workpiece, method employed, and surrounding environment. The particulates and gases generated during welding are considered to be the most harmful in comparison with the other byproducts of welding.

The composition and the rate of generation of welding fumes are characteristic of the various welding processes, and are affected by the welding current, shielding gases, and the technique and skill of the welder. The chemical properties of welding fumes can be quite complex. Most welding materials are alloy mixtures of metals characterized by different steels that may contain iron, manganese, silica, chromium, and nickel. Fumes generated from stainless steel electrodes usually contain about 20 % chromium with 10 % nickel, whereas fumes from mild steel welding are usually > 80 % iron with some manganese and no chromium or nickel present. Both chromium and nickel have been classified as human carcinogens. Exposure to high levels of manganese has caused neurological disorders in workers involved in the mining and processing of manganese ores. However, a neurotoxic effect of manganese in welders is uncertain. Several irritant gases, such as carbon monoxide, ozone, and oxides of nitrogen, may be generated in significant quantities during common arc welding processes due to different shielding gases and fluxes used.

A number of epidemiology studies have examined the respiratory health of welders.

Variable results have been reported in the studies evaluating the effect of welding fumes on lung function. Slight but significant reductions in lung function have been observed after welding fume exposure. However, none of the studies which evaluated pulmonary function of welders suggested that usual day-to-day welding exposure alone leads to a severe impairment of lung function. Transient effects on pulmonary mechanical function have been shown to occur at the time of exposure, which can reverse spontaneously during the unexposed period. A possible association between welding and occupational asthma remains mostly uncertain. In surveys of full-time welders, an increase in the prevalence of symptoms of chronic bronchitis is the most frequent problem associated with respiratory health. Studies using laboratory animals to assess the effects of inhaled welding fumes on pulmonary function and bronchoconstriction are non-existent. Questions concerning dose-dependence and time course of effects of welding fumes on pulmonary function remain unanswered.

Deposits of significant amounts of iron oxide have been commonly observed in the lungs of full-time welders without the presence of fibrosis. This condition is known as siderosis and has generally been considered to be benign and not associated with respiratory symptoms. Many animal studies have observed the development of pneumoconiosis after exposure to welding fumes. Interstitial fibrosis was observed in some animal studies, but only after exposure to exceedingly high concentrations of fume. Stainless steel welding fumes have been shown to have a greater inflammatory potential in laboratory animals as compared to mild steel fumes. Currently, little information on the potential underlining mechanisms of lung inflammation caused by welding fume exposure exists.

Acute upper and lower respiratory tract infections have been shown to be increased in terms of severity, duration, and frequency among welders. Chemical irritation of the airway epithelium to metal fumes is a suspected cause of immunosuppression in welders. Several worker studies have reported an excess of mortality in welders due to pneumonia. Animal studies investigating the effects of welding fumes on the immune system and respiratory defense mechanisms are limited. The mechanisms involved in immunosuppression and increases in infection susceptibility after welding fume exposure need to be determined.

Welding fumes have not been definitely shown to be a cause of lung cancer in welders. The potential association of the welding and excess lung cancer incidence and mortality continues to be extensively studied. Several epidemiological studies have indicated an excess risk of lung cancer among welders. However, the interpretation of the excess lung cancer risk is often difficult as there are obvious uncertainties in most studies such as inaccurate exposure assessment and lack of information on smoking habits and exposure to other work-related carcinogens, in particular asbestos. The risk of cancer development in welders is believed by some investigators to be confined to stainless steel welding where the potential human carcinogens, chromium and nickel, are present in significant levels in the fumes. *In vitro* genotoxicity studies have indicated that stainless steel welding fumes are mutagenic in mammalian cells. However, epidemiology studies of welders have not conclusively demonstrated an increase risk of lung cancer after exposure to stainless steel fumes. Chronic welding fume inhalation studies in experimental animals are lacking and are needed to determine the causality, dose-response, and possible underlying mechanisms of welding fume- induced cancer. The results of well-designed toxicology studies also may add important information to

the extensive epidemiology data that already exists concerning the role that welding fumes may play in lung cancer development. Possible molecular mechanisms of carcinogenesis, such as reactive oxygen species generation, activation of nuclear transcription factors, expression of oncogenes, p53 activation, apoptosis, and cell growth regulation, could be studied after welding fume exposure.

Neuropsychiatric symptoms have been observed in some welders. There is concern that manganese in welding fumes may be the causative agent. Epidemiology findings have not definitively proven whether manganese in welding fumes causes neurotoxicity in exposed workers. Animal studies assessing the effects of welding fumes on the central nervous system have not adequately addressed this question.

Welders are exposed to a varied mixture of toxic particulates and noxious gases that are believed to put a large number of workers at increased risk of adverse health effects. Assessing their health effects in experimental studies is a complex task made more difficult by the many different types (approximately 80) of welding processes used commercially. Nevertheless, significant information could be attained by assessing the effects in experimental animals of inhalation exposure to three types of welding fume. These types are: 1) gas metal arc welding with stainless steel electrode; 2) gas metal arc welding with mild steel electrode; and 3) manual metal arc welding with stainless steel electrode. These three processes cover the major types of welding used and allow examination of fumes with vastly different metal profiles and chemical properties. This is because the majority of welding that takes place in industry is gas metal arc welding, and most processes (approximately 90 %) use mild steel electrodes. Gas metal arc fumes are relatively insoluble while manual metal arc fumes contain soluble and insoluble material. Stainless steel fumes contain chromium and nickel which may be carcinogenic in this form. Each of these fumes have the potential to be generated automatically and it is feasible to develop welding fumes generation systems for acute, subchronic, and chronic inhalation studies. Therefore, based on the large number of workers exposed (more the 1 million worldwide) and the gaps in the available health effects data, it is recommended that toxicity testing be conducted with welding fumes. Initially, acute and subchronic inhalation studies are recommended to assess the neurotoxicity, immunotoxicity, and pulmonary toxicity of gas metal arc welding with stainless steel and mild steal electrodes, and manual arc welding with stainless steel electrode. Pending the outcome of these studies, chronic inhalation studies will be recommended with one or more of the welding fume types.

TABLE OF CONTENTS

Executive Summary i

1.0 Basis for Nomination 1

2.0 Physical-Chemical Properties 1

3.0 Uses and Processes 3

4.0 Human Exposure 5

5.0 Hazardous Components 7
- **5.1 Fume** 8
  - **5.1.1 Chromium** 8
  - **5.1.2 Nickel** 8
  - **5.1.3 Iron** 8
  - **5.1.4 Manganese** 9
  - **5.1.5 Silica** 9
  - **5.1.6 Fluorides** 9
  - **5.1.7 Zinc** 10
  - **5.1.8 Aluminum** 10
  - **5.1.9 Copper** 10
  - **5.1.10 Cadmium** 10
- **5.2 Gases** 10
  - **5.2.1 Ozone** 11
  - **5.2.2 Nitrogen Oxides** 11
  - **5.2.3 Carbon Dioxide and Carbon Monoxide** 12

6.0 Human Studies 13
- **6.1 Respiratory Effects** 13
  - **6.1.1 Pulmonary Function** 13
  - **6.1.2 Asthma** 15
  - **6.1.3 Metal Fume Fever** 17
  - **6.1.4 Bronchitis** 18
  - **6.1.5 Pneumoconiosis and Fibrosis** 20
  - **6.1.6 Respiratory Infection and Immunity** 22
  - **6.1.7 Lung Cancer** 23
- **6.2 Non-Respiratory Effects** 29
  - **6.2.1 Dermatological and Hypersensitivity Effects** 29
  - **6.2.2 Central Nervous System Effects** 29
  - **6.2.3 Reproductive Effects** 32

7.0 Animal Studies 33
- **7.1 Cytotoxicity Studies** 33
- **7.2 Genotoxicity and Mutagenicity Studies** 34
- **7.3 Pulmonary Inflammation, Injury, and Fibrosis** 35
- **7.4 Pulmonary Deposition, Dissolution, and Elimination** 37
- **7.5 Lung Carcinogenicity** 39
- **7.6 Pulmonary Function** 39
- **7.7 Immunotoxicity** 40
- **7.8 Dermatological and Hypersensitivity Effects** 40
- **7.9 Central Nervous System Effects** 41
- **7.10 Reproductive and Fertility Effects** 42

8.0 References 43

Appendix A: Abbreviations 61

Tables

- **Table 1. Welding Processes and Applications** 5
- **Table 2. Hazardous Byproducts of Welding** 7

Figures

- **Figure 1. Shielded Manual Metal Arc Welding (MMAW)** 3
- **Figure 2. Gas Metal Arc Welding (GMAW)** 4
- **Figure 3. Flux-cored Arc Welding (FCAW)** 4

1.0 Basis of Nomination

The epidemiology data on the health of welders regarding chronic lung disease and lung cancer is inconclusive. Moreover, carcinogenicity and short-term and long-term toxicology studies of welding fumes in animals are lacking or incomplete. The nomination of welding fumes by NIOSH as a candidate for inhalation NTP studies is based upon the large number of occupationally-exposed workers and the lack of definitive toxicology data from both human and animal studies.

2.0 Physical-Chemical Properties

Electric arc welding joins pieces of metal that have been made liquid by heat produced as electricity passes from one electrical conductor to another (Howden et al., 1988). Temperatures above 4000° C in the arc heat both the base metal pieces to be joined and a filler metal coming from a consumable electrode wire, which is continuously fed into the weld. Most of the materials in the welding fume comes from the consumable electrode, which is partially volatilized in the welding process; a small fraction of the fume is derived from spattered particles and the molten welding pool (Palmer and Eaton, 2001). The electrode coating, shielding gases, fluxes, base metal, and paint or surface coatings also contribute to the composition of the welding aerosol. Components of the source materials may be modified, either thermochemically in the welding zone or by photochemical processes driven by ultraviolet light emitted during welding. Vaporized metals react with air, producing metal oxides which condense and form fume consisting of particles which are primarily of respirable size. The composition and the rate of generation of welding fumes are characteristic of the various welding processes, and are affected by the welding current, shielding gases, and the technique and skill of the welder. The concentration of the fume in the welder's vicinity is also a function of the volume of the space in which the welding is performed and the efficiency of fume removal by ventilation (Beckett, 1996a).

The particle size distribution of welding fumes is an important factor in determining the hazard potential of the fumes because it is an indication of the depth to which the particles may penetrate into the lungs and the number of particles retained therein. Studies on welding fume have shown the particles to be < 0.50 µm in aerodynamic diameter (Jarnuszkiewicz et al., 1966; Akselsson et al., 1976; Villaume et al., 1979), giving them a high probability of being deposited in the respiratory bronchioles and alveoli of the lungs where rapid clearance by the mucociliary system is not effective. Morphologic characterization of welding fume have shown that many of the individual particles are in the ultrafine size range (0.01-0.10 µm) and had aggregated together in the air to form longer chains of primary particles (Clapp and Owen, 1977). This

agglomeration is enhanced by the turbulent conditions resulting from heat generated during the welding process, thus increasing particle movement and chances for particle collision. Zimmer and Biswas (2001) have demonstrated that the choice of welding alloy had a marked effect on the particle size, distribution, morphology, and chemical aspects of the resultant fume. In addition, they showed that the particle size distribution resulting from arc welding operations were multi-modal and dynamically changed with respect to time. Importantly, ultrafine-sized particles in general have been found to cause greater pulmonary effects than larger sized particles. Even ultrafine particles of relatively benign materials such as titanium dioxide administered to the lungs of experimental animals have been shown to cause greater toxicity than larger-sized titanium particles (Oberdorster et al., 1992; Ferin et al., 1992). It also has been hypothesized that ultrafine particles occurring in the urban atmosphere may be causally involved in adverse effects reported in epidemiology studies of ambient air pollution (Oberdorster et al., 1995).

The chemical properties of welding fumes can be quite complex. Different pure metals commonly found in the materials used in welding evaporate at different rates at a particular elevated temperature depending on the vapor pressures (Howden et al., 1988). Most welding materials are alloy mixtures of metals characterized by different steels that may contain iron, manganese, silica, chromium, nickel, and others. Fumes generated from stainless steel (SS) electrodes usually contain approximately 20 % chromium with 10 % nickel, whereas fumes from mild steel (MS) welding are usually > 80 % iron with some manganese and no chromium or nickel present. The rates at which these alloying elements evaporate also depend upon their concentration in the steel. Several toxic gases, such as carbon monoxide, ozone, and oxides of nitrogen, may be generated in significant quantities during common arc welding processes. In gas metal arc welding (GMAW), shielding gases are commonly added to reduce oxidation and other reactions that occur during the welding process to protect the resultant weld (Howden et al., 1988). The molten metal formed during the reaction is shielded from oxygen and nitrogen in the air by flowing an inert gas mixture (usually containing argon, helium, or carbon dioxide) directly over the weld during the process. The shielding gas can intensify ultraviolet radiation leading to increased photochemical production of gases toxic to the respiratory system such as nitrogen oxides and ozone. Carbon dioxide in the shielding gas can undergo a reduction reaction and be converted to the more chemically stable carbon monoxide. In flux-cored arc welding (FCAW) or shielded manual metal arc welding (MMAW), fluxes are incorporated into the consumable electrode and used in place of shielding gases. The molten fluxes help carry away impurities from the weld in a liquid stream (Sferlazza and Beckett, 1991). The fluxes then are commonly a source for inhalation exposures. Most fluxes contain high levels of fluorides and silicates. Differences also exist in the solubility of the metals found in different types of welding fumes.

Fumes generated during MMAW welding were found to be highly water-soluble, whereas GMAW fumes were relatively insoluble (Antonini et al., 1999). The presence of soluble metals which are likely more bioavailable have been shown to be important in the potential toxic responses observed after welding fume exposure (White et al., 1982; Antonini et al., 1999).

3.0 Uses and Processes

Welding provides a powerful manufacturing tool for high quality joining of metallic components. Essentially, all metals and alloys can be welded; some with ease, others requiring special precautions. The American Welding Society has identified over 80 different types of welding and allied processes in commercial use (Villaume et al., 1979). Of these processes, some of the more common types include shielded manual metal arc welding (MMAW; Figure 1), gas metal arc welding (GMAW; Figure 2), flux-cored arc welding (FCAW; Figure 3), submerged arc welding (SAW), gas tungsten arc welding (GTAW), and others such as, plasma arc welding, and oxygas welding. See Table 1 for a more detailed description of each process. Each method has its own particular metallurgical and operational advantages, and each may present its own potential health and safety hazard. Thus, welders are not a homogeneous group. They work under a variety of conditions- outdoors, indoors in open as well as confined spaces, underwater, and above ground on construction sites, utilizing a large number of welding and cutting processes.

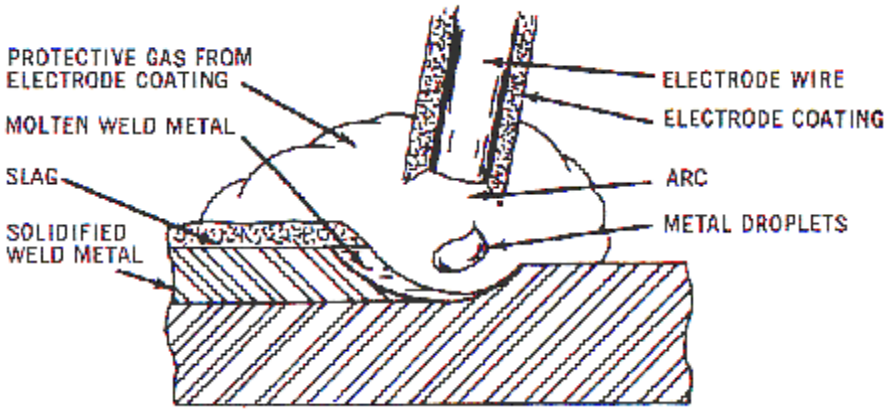

Figure 1. Shielded Manual Metal Arc Welding. The weld is produced by heating with an arc between a covered metal electrode and the work. Shielding is obtained from decomposition of the electrode covering. Filler metal is obtained from the electrode. Diagram used by permission courtesy of Hobart Institute of Welding Technology, 1977.

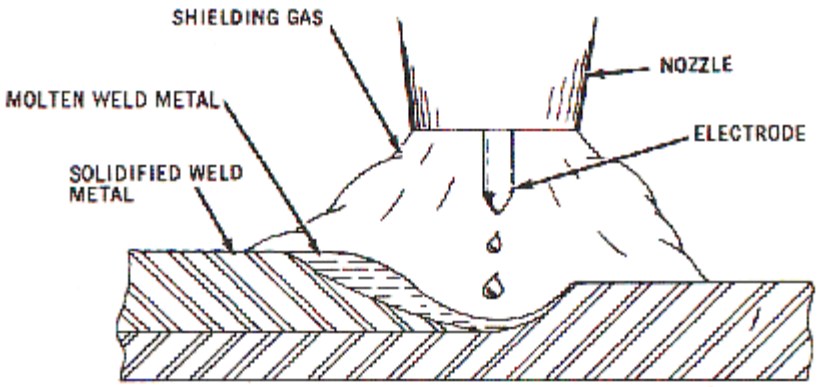

Figure 2. Gas Metal Arc Welding. The weld is produced by heating with an arc between a continuous filler metal (consumable) electrode and the work. Shielding is obtained entirely from an externally supplied gas mixture. Diagram used by permission courtesy of Hobart Institute of Welding Technology, 1977.

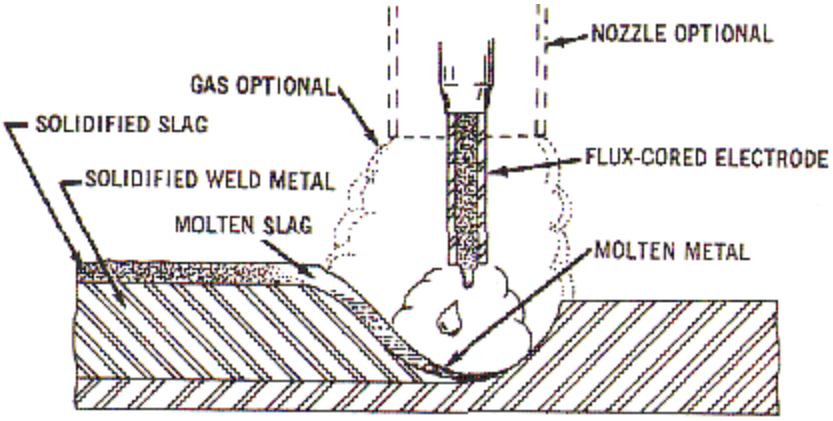

Figure 3. Flux-cored Arc Welding. The weld is produced by heating with an arc between a continuous filler metal (consumable) electrode and the work. Shielding is obtained from a flux contained within the electrode. Additional shielding may or may not be obtained from an externally supplied gas or gas mixture. Diagram used by permission courtesy of Hobart Institute of Welding Technology, 1977.

Table 1. Welding Processes and Applications*

Process	Synonyms	Applications
Shielded Manual Metal Arc Welding (MMAW)	Stick Welding	-welds all ferrous metals -welding in all positions
Gas Metal Arc Welding (GMAW)	Metal Inert Gas Welding (MIG)	-top quality welds in all metals & alloys in industry -little post-welding cleaning -arc/weld pool clearly visible -welding in all positions -high speed, economical -no slag produced in weld
Flux-cored Arc Welding (FCAW)	---	-smooth, sound welds -deep penetration -high quality deposited weld
Submerged Arc Welding (SAW)	---	-high welding speed -high metal deposition rates -deep penetration -smooth weld appearance -easily removed slag covering -wide range of material thickness weldable
Gas Tungsten Arc Welding (GTAW)	Tungsten Inert Gas Welding (TIG)	-top quality welds in all metals & alloys in industry -little post-welding cleaning -arc/weld pool clearly visible -welding in all positions -no weld splatter -no slag produced in weld

*Adapted from Hobart Institute of Welding Technology, 1977.

4.0 Human Exposure

In the United States, a survey of employment indicated that 185,000 workers had a primary occupation as a welder, brazer, or thermal cutter between 1981 and 1983 (NIOSH, 1988). An estimated 800,000 workers are employed full-time as welders worldwide. Still much larger numbers, believed to be more than one million, perform welding intermittently as part of their work duties (Villaume et al., 1979). A more recent estimate indicated that 410,040 workers were employed as welders, cutters, solderers, and brazers in the U.S. in 1999 (Bureau of Labor Statistics, 1999). The current OSHA Threshold Limit Value-Time Weighted Average (TLV-TWA) is 5 mg/m^3 total fume concentration in the breathing zone of the welder or others in the area during all types of welding.

The rate at which fumes are generated by a welding arc is dependent on the process, current level, and the compositions of the wire/flux used as the consumable electrode (Villaume et al., 1979). Larger current levels give higher fume rates. The presence of a flux generally leads to higher fume rates for a given current. The significance of high fume generation rates is that, in the absence of good ventilation, general contamination of the environment can occur quickly, particularly with welding in confined spaces. For example, Sferlazza and Becket (1991) calculated that when welding generates fume at 1 g/min (a rate of fume generation common in some processes) in a closed room of 3 m^3 in size, the concentration of the respirable fume in air after 1 minute of welding would easily exceed the TLV-TWA of 5 mg/m^3 over an 8 hour workday. Thus, the potential for inhaling high concentrations of welding fumes may exist under otherwise normal working conditions. When ventilation is poor or welding occurs in confined spaces, the potential for debilitating lung disease is even more likely. Roesler and Woitowiltz (1996) described a case of a welder who developed interstitial lung fibrosis that was attributed to iron accumulation in the lungs. The man had worked for 27 years in confined spaces with inadequate ventilation and no respiratory protection.

Although it is useful to characterize the concentration of particulates in the air during welding, the actual dose delivered to the lungs is more important in determining the health effects of welding fumes. Interestingly, studies have indicated that there is a marked difference in the concentration of contaminants when simultaneous samples are obtained inside and outside the eye protection helmet worn by the welder. Alpaugh et al. (1968) concluded that particulate concentrations were excessive and erratic outside the shielding helmet and measurements within the helmet were quite low and considerably less variable. In addition, nitrogen dioxide and ozone concentrations varied less inside the helmet as compared to outside. Goller and Paik (1985) indicated that fume concentrations at the breathing zone inside the welding helmet were reduced by 36-71 % from concentrations outside the helmets.

Studies of a welder's lungs at autopsy provide some information about dose, but they are often performed years after the welding exposure has ceased and do not take into account particulates cleared from the lungs. Because there is a high content of magnetic ferrous metal in welding fumes, it is possible to measure the ferrous metal in the lungs using a noninvasive *in vivo* technique called magnetometry. Kalliomaki et al. (1983a) studied shipyard MS arc welders using magnetometry. They found that the net rate of alveolar deposition of particles per year in full-time welders was estimated at 70 mg of iron per year, and after 10 years of welding, the average burden of ferrous metal particles in the lungs was 1 g which represented a balance between retention and clearance. Retired welders were found to clear 10-20 % of the accumulated particulate burden per year.

5.0 Hazardous Components

The welding exposure is unique. There is no material from any other source directly comparable to the composition and structure of welding fumes. In a study analyzing injuries associated with maintenance and repair in metal and non-metal mines, Tierney (1977) observed that welding was the most hazardous occupation. There are several reasons why welding is a dangerous occupation: (1) there are a multiplicity of factors that can endanger the health of a welder, such as heat, burns, radiation, noise, fumes, gases, electrocution, and even the uncomfortable postures involved in the work; (2) the high variability in chemical composition of welding fumes which differs according to the workpiece, method employed, and surrounding environment; and (3) the routes of entry through which these harmful agents access the body (Zakhari and Anderson, 1981). The adverse health effects of welding come from chemical, physical, and radiation hazards (see Table 2). Common chemical hazards include metal particulates and noxious gases. Physical hazards include electrical energy, heat, noise, and vibration. Electromagnetic radiation occurs at visible, ultraviolet, and infrared wavelengths. Welding is associated with a number of non-respiratory health hazards. Most common among them are the effects of electricity, heat, and electromagnetic radiation. Ultraviolet light is produced by the electric arc and often causes welders to experience an eye condition called acute photo kerato-conjunctivitis or "arc eye" (Sferlazza and Beckett, 1991). However, the particulates and gases generated during welding are considered to be the most harmful exposure in comparison with the other byproducts of welding.

Table 2. Hazardous Byproducts of Welding

Fume	Gases	Radiant Energy	Other Hazards
Aluminum Cadmium Chromium Copper Fluorides Iron Lead Manganese Magnesium Molybdenum Nickel Silica Titanium Zinc	Carbon Dioxide Carbon Monoxide Nitrogen Oxide Nitrogen Dioxide Ozone	Ultraviolet Visible Infrared	Heat Noise Vibration

5.1 Fume

The fume refers to the solid metal suspended in air which forms when vaporized metal condenses into very small particulates. The vaporized metal becomes oxidized when it comes in contact with oxygen in air, so that the major components of the fume are oxides of metals used in the manufacture of the consumable electrode wire fed into the weld. Some metal constituents of the fumes may pose more potential hazards than others, depending on their inherent toxicity. The most common welding fume components are discussed as follows.

5.1.1 Chromium

The welding of SS and high alloy steels presents a problem of chromium in the fumes. Chromium has a low TLV-TWA of 0.5 mg/m^3. Chromium can exist in various oxidation states in SS welding fumes (Villaume et al., 1979; Sreekanthan, 1997). Both trivalent (Cr^{+3}) and hexavalent (Cr^{+6}) have been measured in significant quantities in welding fumes. Analysis of welding fume demonstrated that Cr^{+6} concentration is a function of the shielding gas used (Sreekanthan, 1997). Cr^{+3} has been considered to be of a low order toxicity because it does not enter cells, whereas Cr^{+6} has been found to be quite toxic and is currently classified as a human carcinogen (Cohen et al., 1993). Studies have indicated that welding fumes containing Cr^{+6} have mutagenic activity (Stern, 1977; Maxild et al., 1978; Costa et al., 1993a; 1993b). Epidemiology studies have indicated a possible increase in mortality from lung cancer among SS welders (Becker et al., 1985; Sjogren et al., 1994).

5.1.2 Nickel

Nickel is present in SS welding fumes and in nickel alloys. Nickel is classified as a human carcinogen (NIOSH, 1977). Inhalation of nickel compounds causes lung cancer. There appear to be substantial differences in the carcinogenic potency of different nickel compounds (Lauwerys, 1989). Studies have indicated that SS welding fumes containing nickel are potentially mutagenic (Hedenstedt et al., 1977; Costa, 1991). Epidemiologic studies suggest that SS welders have an increased risk for developing lung cancer due to elevations in nickel (Gerin et al., 1984; Langard, 1994). However, this elevated risk has not been definitively shown to be associated with exposure to specific fume components and processes of welding (IARC, 1987).

5.1.3 Iron

The chief component of fumes generated from most welding processes is iron oxide. Iron oxide is considered a nuisance dust with little likelihood of causing chronic lung disease after inhalation. However, iron oxide particles have been observed to accumulate in the alveolar macrophages and lung interstitium. As a result, long term exposure to arc welding fumes leads to a pneumoconiosis in welders referred to as siderosis (Doig and McLaughlin, 1936; Enzer and Sander, 1938). On chest radiographs, diffuse, small rounded opacities, usually of low profusion

and without the presence of complicated lesions or progressive fibrosis, are observed (Sferlazza and Beckett, 1991). Pulmonary function tests appear not to change significantly, and blood gases at rest and during exercise remain normal after the development of siderosis (Howden et al., 1988).

5.1.4 Manganese

Manganese is present in most welding fumes and has been shown to be both a cytotoxic and neurotoxic substance (Agency for Toxic Substance and Disease Registry, 1992). Manganese oxide is used as a flux agent in the coatings of shielded metal arc electrodes, in the flux-cored arc electrodes, and as an alloying element used in electrodes (Villaume et al., 1979). Some special steels containing a high manganese content may produce a high concentration of manganese oxide in the fume (Moreton, 1977). A well-recognized occupational disease of the central nervous system resembling Parkinson's Disease is a distinctive manifestation of chronic manganese poisoning (Cooper, 1984). It has been hypothesized that welding fume exposure may cause a Parkinson's-like disorder (Chandra et al., 1981; Sjogren et al., 1996; Racette et al., 2001). However, there is no cited case studies which definitely indicate that manganese in welding fumes affects the central nervous system of welders. Moreover, welders exposed to manganese fumes in one study did not have higher blood concentrations of manganese than controls (Sjorgen et al., 1996).

5.1.5 Silica

The principal source of silica in the welding fumes is from the coating of metal electrodes and from the flux composition of flux-cored electrodes. The coatings or the flux contain a high amount of silicon (5-30 %) as silica, ferro-silicate, kaolin, feldspar, mica, talc, or waterglass (Pantucek, 1971). The silica which is found in welding fumes is in the non-cytotoxic, amorphous form, and not the highly cytotoxic, crystalline form which is associated with silicosis (Villaume et al., 1979).

5.1.6 Fluorides

The major source of fluorides in the fumes is from the covering on metal arc electrodes or the flux and slag composition of flux-cored arc electrodes. The low hydrogen-covered electrode and self-shielded flux-cored electrodes contain large amounts of calcium fluoride (Fluorospar). The inhalation of gases containing fluorine has been shown to injure lungs (Stavert et al., 1991), and pulmonary exposure to particulate fluorides in the workplace has been implicated as a risk factor for occupational lung disease (O'Donnell, 1995). It has been demonstrated previously that MMAW fumes cause more lung injury and inflammation in rats than GMAW welding fumes (Coate, 1985; Antonini et al., 1997). In addition, fluoride inhalation has been shown in mice to suppress lung antibacterial defense mechanisms which may increase the susceptibility to

infection (Yamamoto et al., 2001).

5.1.7 Zinc

Exposure to zinc by welders most often comes from the galvanized coating on metal which is welded. Metal fume fever occurs when the galvanized metal is heated sufficiently to vaporize zinc, thus creating a fume high in zinc oxide. Metal fume fever is the most commonly described acute respiratory illness of welders (Sferlazza and Beckett, 1991). It begins 6-8 hours after the inhalation of fume and is characterized by flu-like symptoms, a sweet, metallic taste in the mouth, excessive thirst, high fever, and a non-productive cough. The acute illness is self-limiting and resolves in 24-48 hours.

5.1.8 Aluminum

Aluminum is commonly used as an additive in many steels and nonferrous alloys present in welding electrodes. Aluminum is also present within coatings, such as paint, electro-plated or sprayed, and hot dip coatings on the materials welded (Howden et al., 1988). The common practice of GMAW welding of aluminum alloys using aluminum-magnesium filler wire produces relatively high fume rates due to the relative ease with which magnesium vaporizes. Also, the welding of aluminum is particularly conducive to the production of the pneumotoxic gas, ozone.

5.1.9 Copper

High exposure levels of copper are possible when copper and its alloys are welded. Another source is from copper-coated GMAW electrodes. Vaporized copper has been implicated as one of the metals present in welding fume which causes metal fume fever (Sferlazza and Beckett, 1991).

5.1.10 Cadmium

Cadmium is an element sometimes used in the manufacture of fluxes found in flux-cored electrodes. Cadmium in welding fumes has been reported to be a cause of acute chemical inhalation lung injury (Anthony et al., 1978). A bilateral pulmonary infiltration representing inflammation, hemorrhage and/or edema, and a restrictive change are the predominant clinical manifestation. A resolution of the acute condition may be complete or there may be residual impairment of lung function (Townsend, 1968). Interestingly, cadmium fume is one of the few specific welding-associated exposures for which a fatal outcome has been described (Patwardhan and Finch, 1976). The presence of cadmium in welding fume has also been implicated in the development of metal fume fever (Ohshiro et al., 1988).

5.2 Gases

Several toxic gases are generated during common arc welding processes. Among these include ozone, nitrogen oxides, carbon monoxide, and carbon dioxide. Degreasing chemicals

such as chlorinated hydrocarbons are often used to ensure cleanliness of the base metals prior to welding (Howden et al., 1988). Tricholorethylene is one of the agents commonly used and has a high vapor pressure. The airborne vapors around the arc are subjected to oxidation that is enhanced by ultraviolet radiation from the welding arc to produce the pulmonary irritant gas, phosgene. The gases produced during welding have several origins, depending upon the specific welding processes. They include: (1) shielding gases; (2) decomposition products of electrode coatings and cores; (3) reaction in the arc with atmospheric constituents; (4) reaction of ultraviolet light with atmospheric gases; and (5) decomposition of degreasing agents and organic coatings on the metal welded (Villaume et al., 1979).

5.2.1 Ozone

Ozone (O_3) is an allotropic form of oxygen. It is produced during arc welding from atmospheric oxygen in a photochemical reaction induced by ultraviolet radiation emitted by the arc. The reaction is induced in two steps by radiation of wavelengths shorter than 210 nm (Edwards, 1975):

1) O_2 + uv light (< 210 nm) $\rightarrow$ 2O
2) $O + O_2 \rightarrow O_3$

The rate of formation of ozone depends upon the wavelengths and the intensity of ultraviolet light generated in the arc, which is in turn is affected by the material being welded, the type of electrode used, the shielding gas, the welding process, and welding variables, such as voltage, current, and arc length (Pattee et al., 1973). Ozone is a severe respiratory irritant. Exposure to levels above 0.3 ppm can cause extreme discomfort while exposure to 10 ppm for several hours can cause pulmonary edema (Palmer, 1989). Ozone is unstable in air and its decomposition is accelerated by metal oxide fumes. Therefore, significant quantities of ozone are generally not associated with welding processes, such as FCAW and MMAW, that generate large quantities of fume (Maizlish et al., 1988). However, Steel (1968) measured concentration of ozone in the range of 0.1-0.6 ppm in forty shipyards using three different welding processes. The current OSHA standard for ozone is 0.1 ppm. In other studies, Nemacova (1984; 1985) found ozone levels generated by different welding and cutting procedures to be well below U.S. TLVs.

5.2.2 Nitrogen Oxides

Oxides of nitrogen are formed during welding processes by direct oxidation of atmospheric nitrogen at high temperatures produced by the arc or flame (Villaume et al., 1979). The first reaction which takes place is the formation of nitric oxide (NO) from nitrogen and

oxygen:

1) $N_2 + O_2 \rightarrow 2NO$

The rate of formation of NO is not significant below a temperature of 1200º C, but increases with rising temperatures. After dilution with air, NO can react further with oxygen to form nitrogen dioxide.

2) $2NO + O_2 \rightarrow 2NO_2$

Nitrogen oxides have been shown to be an irritant to eyes, mucus membranes, and lungs when inhaled. Exposure to very high concentrations can cause severe pulmonary irritation and edema (Ichinose et al., 1997). Chronic exposure may affect lung mechanics, resulting in decreased lung compliance, maximum breathing capacity, and vital capacity. It has been reported that nitrogen dioxide levels in the welding area can be as high as 7 ppm during FCAW (Howden et al., 1988). Levels inside the welder's eye protection mask, however, were as low as 2 ppm, illustrating that the welder's hood offered some protection to the breathing zone.

5.2.3 Carbon Dioxide and Carbon Monoxide

Carbon dioxide (CO_2) and carbon monoxide (CO) are formed by the decomposition of organic compounds in electrode coatings and cores, and from inorganic carbonates in coatings. CO is often encountered during the welding of steel when the electrode coatings contain calcium carbonate ($CaCO_3$; lime) or with the GMAW process when the shielding gas is CO_2 or argon/CO_2 mixtures (Howden et al., 1988). At the high temperatures in the arc and at the molten metal surface, CO_2 is reduced to the more chemically stable CO.

CO toxicity is caused by the formation of carboxyhemoglobin and thus decreases the ability of the blood to carry oxygen to various tissues. If the carboxyhemoglobin level reaches 50 %, unconsciousness may occur (Smith, 1991). Steel (1968) has indicated that CO levels were quite low in shipyards when measured away from the welding arc, whereas, much higher concentrations were detected near the arc when CO_2 shielding gases were used. Others have indicated that CO levels can be very high in both poorly and well-ventilated areas (Hummitzsch, 1960; Erman et al., 1968). Tsuchihana et al. (1988) showed that concentrations of CO near the plume were over eight times higher for inside welding as compared to welding performed outside. They also found that individual levels of carboxyhemoglobin in welders working inside exceeded 15 %. This approaches the level of 20 % carboxyhemoglobin which increases vascular wall permeability to macromolecules and may be important in the pathogenesis of atherosclerosis (Hanig and Herman, 1991), but is still below the 30 % level associated with electrocardiogram changes, headaches, weakness, nausea, or dizziness (Smith, 1991).

6.0 Human Studies

6.1 Respiratory Effects

6.1.1 Pulmonary Function

Over the last several decades, numerous studies have addressed the effects of welding fumes on the pulmonary function of workers. Pulmonary function tests are used to detect disease processes, such as fibrosis and emphysema which restrict lung expansion or reduce pulmonary elasticity, respectively (Palmer, 1989). These tests measure the air volume which can be inhaled or expelled either forcefully or under normal conditions. Pulmonary function tests are often used in occupational settings to monitor respiratory damage after exposure to inhaled substances. However, these measurements are not always sensitive enough to observe early signs of lung pathology, and irreversible damage may occur before measured reductions in pulmonary function are detected (Palmer, 1989). Variable results have been observed in the many studies evaluating the effect of welding fumes on lung function. Some studies were conducted in carefully controlled work environments, others during actual workplace conditions, and some in laboratories. Thus, the severity of exposure to welding fume varied widely due to differences such as, welding processes and materials used, duration of exposure, ventilation of the exposure area, and duration of time between welding and lung function measurement. Stern (1981) indicated three other factors which may confound the results of pulmonary function tests in welders. One is the effect of population dynamics, whereby self-selection among welders may encourage those workers who experience respiratory problems to seek a different occupation. The second is the effect of smoking on pulmonary function. Some studies have indicated that effects on lung function may be related to the smoking habits of welders (Hunnicutt et al., 1954; Cotes et al., 1989; Chinn et al., 1990). The third factor is a bystander effect. Many welders are employed in shipyards where there is known to be a higher incidence of chronic lung disease among all workers than in other populations. Thus, the results of the pulmonary function tests may be related to exposures other than welding fumes at the place of employment.

After an extensive review of the literature, Sferlazza and Beckett (1991) indicated that none of the studies which evaluated pulmonary function of welders suggested that usual day-to-day welding exposure alone in the absence of an acute inhalation injury episode leads to a severe or clinically apparent degree of lung function impairment. Most studies demonstrated little to no measurable effects of welding on lung function (Oxhoj et al., 1979; McMillan and Heath, 1979; Keimig et al., 1983). However, it is possible that small numbers of heavily exposed or more susceptible workers possibly could account for some of the differences that were observed

between welders and control populations. For example, studies of welders in shipyards, who are more likely to be exposed to higher fume conditions due to work in more confined, poorly ventilated areas, showed more negative effects on lung function than welders working in well-ventilated places (Oxhoj et al., 1979; Chinn et al., 1990; Akbar-Khanzadeh, 1980; 1993). In addition, Mur et al. (1985) demonstrated that welders who worked in confined spaces had reduced lung function as compared with those who worked in well-ventilated areas within the same plant.

Many studies also have tried to determine whether welders may experience acute asymptomatic transient decrements in pulmonary function on an everyday basis as a result of usual inhalation exposures. It has been suggested that transient effects on pulmonary mechanical function may occur at the time of exposure, which can reverse spontaneously during the unexposed period before the next exposure (Sferlazza and Beckett, 1991). In an early study, McMillan and Heath (1979) studied the acute changes in pulmonary function of 25 welders with 6-25 years of experiences with 25 electrical fitters as controls that were matched by age and smoking habits. Pulmonary function tests were performed at the beginning and end of a work shift. They observed no significant differences in across-shift lung function tests when comparing welders and controls subjects. Akbar-Khanzadeh (1993) obtained different pulmonary function tests before and after a working shift for 209 welders and 109 non-welding controls in England. Significant decreases were observed from morning to afternoon in all three pulmonary function indices measured among both welders and controls, but the reduction was nearly 4 times greater among welders. In general, there was no significant association between the acute changes in lung function and daily amount of exposure to welding fume. However, acute reduction of the forced expiratory volume in one second was positively correlated with the levels of Fe_2O_3 produced. Also, welders who did not use any ventilation showed maximal reductions in some measures of lung function as compared to welders working in well-ventilated areas. Kilburn et al. (1990) examined pulmonary function across a Monday work shift in 31 subjects (21 welders and 10 non-welders). Pulmonary function changes were less than 2 % and were not significantly different between groups. In a related study, Donoghue et al. (1994) examined the peak expiratory flow (PEF) of non-smoking welders and non-welders over a 12 hour period from the start of work on a Monday. It was observed that the mean change in PEF among welders at 15 minutes was significantly different from that of the non-welders, and the group mean for the maximum fall in PEF at any time during the 12 hour period was significantly greater for the welders. However, none of the welders had PEF reductions of 20 % which are considered to be diagnostic for asthma.

In a more recent study, Beckett et al. (1996b) compared the changes in lung function in

51 shipyard welders and 54 controls in a 3-year study. They also examined changes in lung function that were seen across a work shift and compared them with changes that occurred during a non-working day in a group of 49 welders. The average duration of active welding was 4 hours during a shift, and only 33 % of the welders used respiratory protection. A small, but significant, decline in maximal mid-expiratory flow was observed on the welding day as compared with the non-welding day. The aggregate number of respiratory symptoms was low, but the total number of symptoms increased during the welding day and decreased during the non-welding day. The authors concluded that welding was associated with a transient across-shift decrement in maximal mid-expiratory flow as well as reversible, work-related respiratory symptoms. No decline was observed in lung function or increase in airway reactivity over the 3-year observation period. Sobaszek et al. (2000) examined the acute respiratory effects of 144 SS and MS welders and 223 controls at the start and end of a work shift. A significant decrease in forced vital capacity was observed in SS welders during the shift, presumably due to a sensitization of the respiratory tract by chromium. In addition, after 20 years of welding, SS welders had more significant across-shift reductions in lung function as compared with MS welders with similar exposure histories. Moreover, the across-shift decreases in lung function measurements were significantly related to MMAW welding processes as compared to GMAW processes. Similarly, Mur et al. (1985) observed that shielded MMAW welders had significant reductions in pulmonary function when compared with GMAW welders. These findings indicate that the materials and processes used during the welding exposure may have a profound affect on acute lung function.

6.1.2 Asthma

Occupational asthma is caused by the inhalation of specific sensitizing agents in the workplace and is distinguished from non-occupational asthma by an older age of onset, a lack of seasonal variations in symptoms, and an improvement of symptoms when away from work (Palmer and Eaton, 2001). Occupational asthma may develop as a consequence of exposure to certain types of welding. In SS welding, high concentrations of chromium and nickel in the fumes are considered responsible for airway sensitization (Howden et al., 1988). A possible association between welding and occupational asthma remains mostly uncertain. Many of the studies performed are difficult to compare because of differences in worker populations, industrial settings, welding techniques, and duration of exposure. Sferlazza and Beckett (1991) indicated that occupational asthma has not been definitively proven to be caused by inhalation of welding fumes. They concluded that given the prevalence of asthma in the general population and the large number of full-time welders, there is likely an infrequent occurrence of asthma in welders.

Many studies have been performed to examine this association. Meredith (1993) evaluated new cases of asthma reported for all occupations during 1989 and 1990. Three cases (0.3 %) of occupational asthma were identified in workers exposed to SS welding fumes and 20 cases (1.8 %) in workers exposed to other welding fumes. Asthma was diagnosed in 124 of 246 new cases of occupational lung disease reported in a survey by Contreras et al. (1994). Welding fumes were the suspected cause of four (3.2 %) of the asthma cases. In a worker cohort study, Wang et al. (1994) compared the incidence of asthma among SS and MS welders at four factories in Sweden. Both former and active welders were included in the cohort evaluation. There were 209 active welders (67 SS/142 MS) and 187 ex-welders (57 former SS/130 former MS) who took part in the study. There were 26 controls who were active as vehicle assembly workers and had never performed welding. Both groups of welders and ex-welders were given questionnaires regarding respiratory symptoms. The presence of phlegm was significantly more prominent among both SS and MS welders as compared to assembly workers. A significant increase in dyspnea was observed in the active SS and ex-MS welders when compared to the controls. No difference in the prevalence of reported symptoms were observed between SS and MS welders. Lung function also was evaluated in 23 of the active SS welders, 23 of the active MS welders, and the 26 controls to test for the development of asthma. Lung function and bronchial responsiveness tests with methacholine were normal and showed no significant differences between the SS and MS welders or between welders and controls. The authors did conclude that the results of their study suggests that both SS and MS welding are associated with a relatively high incidence of asthma. Boulet et al. (1992) examined 11 patients with occupational asthma. Welding was implicated as the causative agent in two of the cases. After the review of published studies of respiratory symptoms of welders, Billings and Howard (1993) concluded that the association of welding fumes with obstructive airway disease may be as important as that of smoking.

In a large epidemiology study evaluating workers in Northern England, Beach et al. (1996) evaluated the prevalence of asthma in welders compared with other shipyard employees in a study of 1,024 workers. Subclinical respiratory changes predictive for asthma were measured after 3, 5, 7, and 9 years of employment in a specific trade. Occupations in the shipyard were ranked according to their exposure to airborne contaminants. Controls were apprentices newly hired by the shipyard. The results indicated that a statistically significant change in airway responsiveness was observed among MS welders when compared to workers with negligible exposure to airborne contaminants. A dose-response relationship was seen between total fume concentration and airway responsiveness, but the observed changes in lung function did not correlate with the concentration of any one metal measured in personal air samplers. The authors

concluded that the subclinical changes in lung responsiveness that were seen among welders in their study may be important signs of progression towards clinical asthma. It was estimated that approximately 1 % of MS welders were likely to develop occupational asthma after 5 years of work. In a prospective study, Simonsson et al. (1995) evaluated bronchial responsiveness in Swedish workers during the first 3 years of their employment. Sixty-five of the 202 workers tested for lung function had been exposed to welding fumes. The control group was comprised of 49 workers from the food industry. Significant decrements were observed in standard lung function tests when comparing the workers exposed to welding fumes and the controls. The reduction in lung function was found to be related to the duration of the welding experience and to the eventual development of asthma. Toren (1996) evaluated the self-reported incidence of occupational asthma in Sweden from 1990-1992. Reported incidence rates were calculated by comparing the number of persons from the general population employed in the same job categories. The self-reported incidence rate among male welders aged 20-64 was 7 times greater than that of the working male population. When younger male welders (aged 20-44) were separated from the analysis, the incidence rate was even higher at 9 times the rate of the general working male population.

6.1.3 Metal Fume Fever

The most frequently observed acute respiratory illness of welders is metal fume fever, a relatively common febrile illness of short duration which may occur during and after welding duties. The condition is caused by the inhalation of freshly formed zinc oxide fumes. It occurs most frequently among welders joining or cutting through galvanized zinc-coated steel or other zinc alloys (Sferlazza and Beckett, 1991). The same clinical symptoms can also be observed after the inhalation of fumes which are comprised of copper, magnesium, or cadmium. Metal fume fever is characterized by its acute onset (approximately 4 hours after exposure) and often simulates a flu-like illness (Liss, 1996). The symptoms include thirst, dry cough, a sweet or metallic taste in the mouth, chills, dyspnea, malaise, muscle aches, headaches, nausea, and fever. The illness is self-limiting and usually resolves in 24-48 hours after onset. Metal fume fever has been experienced on the first day of exposure by new welders as well as large numbers of long-time welders (approximately 30 %) on one or more occasions (Liss, 1985). A short-term tolerance can develop with repeated exposure to metal fumes, and episodes of metal fume fever often occur on Mondays after a weekend break from exposure (Palmer and Eaton, 1998). Vogelmeier et al. (1987) examined metal fume fever in a locksmith after welding. During exposure, zinc levels and peripheral leukocytes were elevated in the blood as body temperature rose. Significant alterations were observed in lung function as evidenced by a fall in inspiratory vital capacity, single-breath diffusing capacity, and arterial oxygen partial pressure. By 24 hours

after exposure, however, lung function returned to normal, but the number of total lung cells recovered by bronchoalveolar lavage was nearly ten times greater than normal with a marked increase in polymorphonuclear leukocytes. In another study, human volunteers were exposed to 5 mg/m^3 of ultrafine zinc oxide for 2 hours (Gordon et al., 1992). Each of the four subjects developed one or more symptoms of metal fume fever within 6-10 hours which by 24 hours after exposure had a resolved. No changes in lung function were detected at any time throughout the exposure.

Even though the etiology of metal fume fever is known, the mechanism by which inhaled metal oxides commonly present in welding fumes induce the illness has not yet been determined. Blanc et al. (1991) suggested that pulmonary responses of inflammatory cells may play a large role in metal fume fever. The yield of both macrophages and polymorphonuclear leukocytes recovered by bronchoalveolar lavage were significantly elevated in human subjects 22 hours after exposure to zinc oxide fumes. The investigators speculated that pro-inflammatory mediators such as cytokines may be responsible for the symptoms associated with metal fume fever. Bronchoalveolar lavage fluid was collected at 3, 8, and 22 hours from workers after welding galvanized steel for 15-30 minutes (Blanc et al., 1993). Concentrations of tumor necrosis factor- (TNF-), interleukin (IL)-1, IL-6, and IL-8 were significantly elevated in exposed workers as compared to unexposed controls. IL-8 levels peaked at 8 hours whereas IL-6 values steadily increased with time after exposure and reached a maximum concentration at 22 hours. TNF- levels were elevated as soon as 3 hours after exposure but not at 8 and 22 hours. It was concluded that macrophages become activated after inhalation of zinc oxides fumes and release different pro-inflammatory cytokines which are responsible for the development of metal fume fever. They hypothesized that TNF- was a key mediator, playing a large role in the initial response of metal fume fever, whereas IL-6 and IL-8 are likely involved in the later response.

6.1.4 Bronchitis

Bronchitis is a condition characterized by airway inflammation as a result of inhalation of substances such as cigarette smoke, nitrogen dioxides, and sulfur dioxide (Villaume et al., 1979). In surveys of full-time welders, an increase in the prevalence of symptoms of chronic bronchitis is the most frequent problem associated with respiratory health (Sferlazza and Beckett, 1991). Chronic bronchitis is defined as cough and mucus expectoration on most days for 3 months or more out of the year for 2 years or more preceding the survey of the respiratory condition. One factor affecting the ability to detect chronic bronchitis in welders is the prevalence of cigarette smoking in welders and chronic bronchitis caused by smoking in control populations.

A number of studies have been performed to evaluate the prevalence of chronic bronchitis in full-time welders. In a study of 156 Danish welders and 152 controls from the same plant, no

statistical difference in the rate of chronic bronchitis was seen when comparing the welders with the control group (Fogh et al., 1969). In addition, Antti-Poika et al. (1977) indicated that welders were not at a greater risk of developing serious respiratory ailments than other workers with similar smoking habits and socioeconomic status. In a study of 157 employed welders, they found that there was a significantly greater prevalence of chronic bronchitis in welders than in controls. However, persistent cough and dyspnea were more frequent complaints among the controls as compared to the welders. They concluded from their study that there were no differences in rates of chronic bronchitis due to age, smoking habits, duration of welding exposure, or welding processes and materials used. In a study by McMillan and Heath (1979), no significant differences were observed in respiratory symptoms in comparison of 9 welders and 8 controls. However, interpretation of their results was difficult because of the small sample population size and the fact that 6 of the welders and 7 of the controls were smokers. In an evaluation of shipyard workers 45 years of age or older, in whom the rate in welders and controls was 50 % current smokers and 33 % former smokers, no difference in the prevalence of chronic bronchitis was observed (McMillan and Plethybridge, 1984). However, dyspnea was reported in the study to be nearly 4 times higher in welders as compared to controls. Zober et al. (1984) examined a group of 10 welders with an average welding experience of 20 years. Chronic bronchitis was found to occur only among heavy smokers. Examination of the upper respiratory tract indicated no work-related inflammation. In another study, Zober and Weltle (1985) examined the respiratory effects of 305 welders who had an average welding experience of 21 years. They concluded that an excess of bronchitis was related to smoking rather than welding. Similarly, other studies have suggested an interaction between smoking and welding in the development of chronic bronchitis (Cabal et al., 1988; Sulotto et al., 1989).

Even more studies have been performed which indicate that welding fumes may induce chronic bronchitis in full-time welders irregardless of cigarette smoking. In addition, there appears to be an increased prevalence of chronic bronchitis among welders who smoke cigarettes. An early study evaluated the rates of chronic bronchitis among 100 welders and 100 control subjects in a U. S. shipyard (Hunnicutt et al., 1954). The prevalence of symptoms of bronchitis among smoking welders was 79 % as compared to 36 % for smoking controls and was 41 % among non-smoking welders versus 5 % among non-smoking control subjects. The prevalence of chronic bronchitis was studied in a Romania shipyard by Barhad et al. (1975). In the examination of 173 welders versus 100 control subjects, chronic bronchitis occurred 1.5 times more frequently in the welders than in controls. A significant increase in the prevalence of bronchitis was also observed when smoking habits and age were considered. In addition, Oxhoj et al. (1979) observed a higher prevalence of both chronic bronchitis and wheezing when

comparing arc welders with non-welders when considering smokers, ex-smokers, and non-smokers in a Swedish shipyard. Interestingly, Naslund and Hogstedt (1982) measured ferromagnetic levels in 187 welders with at last 5 years experience and a homogenous welding fume exposure and related it to the frequency of chronic bronchitis. The welders had an increase magnetite deposition compared with age-matched controls. The investigators also observed a dose-response relationship in the incidence of chronic bronchitis in smokers and non-smokers by magnetopneumography. Mur et al. (1985) suggested that smoking and welding act synergistically in the induction of bronchitis. They also observed that bronchitis occurred more frequently in shielded MMAW welders as compared to GMAW welders indicating that bronchitis may be related to the type and extent of exposure. Cotes et al. (1989) studied 607 shipyard welders and similarly exposed caulker burners. Subjects over 50 years of age had a 40 % prevalence of chronic bronchitis with a relative risk ratio of 2.8 when adjusted for age and smoking status. Beckett et al. (1996b) evaluated the respiratory symptoms of SS shipyard welders for a 3-year period. During the first year of the study, 35 % of the welders reported that they experienced cough, phlegm, wheezing, and chest tightness during the work week with improvements on weekends. These symptoms were significantly more frequent among welders than among controls throughout the study, but they subsided as welding exposure diminished during the course of the 3-year period. The frequency of chronic bronchitis did not differ between welders and controls.

6.1.5 Pneumoconiosis and Fibrosis

Soon after the use of arc welding became common in the workplace, the observation of abundant small opacities on chest radiographs of asymptomatic welders was reported (Doig and McLaughlin, 1936; Enzer and Sander, 1938). When the lungs were examined at autopsy, deposits of significant amounts of iron oxide were observed without the presence of fibrosis. This condition became known as siderosis and is usually classified to be a benign pneumoconiosis as iron oxide is considered to be inert (Liss, 1996). Most of the deposited iron oxide particles are present in alveolar macrophages with no thickening of the alveolar septa and no presence of alveolitis (Morgan, 1989). The incidence of occupational pneumoconiosis in Poland was examined from 1961-1992 (Marek and Starzynski, 1994). Approximately 92 % of the cases occurred in workers 40 years of age or older with a history of at least 20 years of exposure before disease development. The most prevalent forms of pneumoconiosis were due to coal dust and silica exposure, diagnosed in 5 and 2.8 of every 100,000 workers, respectively. The incidence of arc welders' pneumoconiosis was the next most prevalent form, appearing in 0.7 of every 100,000 workers.

Doig and McLaughlin (1936) first observed welders' siderosis in the radiographs of

welders with no evidence of exposure to silica or coal dust, thus establishing this condition as a distinct entity. When some subjects from their original study were followed for an additional 9 years, it was observed that the chest opacities had completely resolved in one welder who had left the trade and partially resolved in another whose exposure to welding fumes was greatly reduced (Doig and McLaughlin, 1948). Attfield and Ross (1978) examined the relationship between the prevalence of small round opacities of class 0/1 or higher (larger than 1 mm in diameter) and welding exposure based on chest x-rays from 661 British shipyard welders. The appearance of small round opacities 0/1 or greater was not observed before 15 years of exposure, but the prevalence increased with age and with length of exposure in over 30 % of welders with greater than 45 years of exposure. They also observed a 7 % prevalence of pneumoconiosis without any cases of progressive massive fibrosis. Welders' pneumoconiosis has generally been determined to be benign and not associated with respiratory symptoms based on the absence of pulmonary function abnormalities in welders with marked radiographic abnormalities (Morgan and Kerr, 1963; Morgan, 1989). In addition, pulmonary function in welders with siderosis has been observed within normal limits for age and height, or not significantly different from matched, non-welder controls in a cross-sectional study (Kleinfeld et al., 1969).

On the other hand, there are case reports of welders with dyspnea and respiratory symptoms, impairment in lung function, x-ray abnormalities and extensive fibrosis (Liss, 1985). However, these have often been considered to represent a mixed dust pneumoconiosis resulting from welding or non-welding inhalation exposures other than iron oxide encountered in the welder's working area (Morgan, 1962; Guidotti et al., 1978). Billings and Howard (1993) reviewed reports of siderosis and concluded that the disability caused by the disease was modest, but radiological evidence of siderosis could be considered as a marker of extensive welding fume exposure. Funahashi et al. (1988) performed histological examinations on lung tissue of 10 full-time welders with 8-40 years of welding exposure who had symptoms of cough, dyspnea, and abnormal radiographs. Pulmonary function tests revealed restrictive impairment in 7 of the welders, mild to moderate airway obstruction in two, and reduced diffusing capacity in three. Lung biopsies were obtained and tissue elemental analysis was performed by energy dispersive x-ray analysis. Silicon/sulfur (Si/S) and iron/sulfur (Fe/S) ratios were compared with 10 age-matched control and 10 cases of silicosis. It was observed that all subjects had alveolar wall thickening and some degree of fibrosis which was moderate to pronounced in five. The elemental content of tissue showed that the Si/S ratio was not different between controls and welders, whereas patients with silicosis had a significantly higher ratio than controls and welders. The Fe/S ratio was significantly different between silicotic patients and controls, but was significantly lower when compared to the welders. The investigators concluded that interstitial

pulmonary fibrosis may occur after welding exposure and the cause may not involve inhalation of other fibrogenic agents, such as silica. Roesler and Woitowiltz (1996) described the case of a welder with interstitial lung fibrosis that was attributed to iron oxide deposits in the lungs. He had worked as a welder for 27 years mostly in confined spaces with inadequate ventilation. After 8 years as a welder, he developed tuberculosis which was successfully treated with chest x-rays normal. By 10 years, he had developed siderosis with no respiratory symptoms. After 27 years, his condition was diagnosed as a restrictive ventilatory disorder with reduced diffusion capacity. Histology of biopsied lungs revealed iron deposits in close proximity to fibrotic areas, leading the investigators to conclude that the siderosis progressed into interstitial fibrosis. His condition was attributed to exposure to high levels of welding fumes in confined spaces. Previous infection with tuberculosis also may have been a contributing factor.

6.1.6 Respiratory Infection and Immunity

Acute upper and lower respiratory tract infections have been shown to be increased in terms of severity, duration, and frequency among welders (Howden et al., 1988). Chemical irritation, in particular exposure to metal fumes, of the airway epithelium is a suspected cause of the increased incidence of respiratory infections (Kennedy, 1994). Recently, Wergeland and Iversen (2001) have reported that the Norwegian Labor Inspection Authority has issued a warning to Norwegian physicians about the potentially lethal risk association of pneumonia with the inhalation of fumes from thermal metal work. The warning advises physicians who diagnose pneumonia to consider the occupational exposure of the patient. Pneumonia after exposure to fumes from welding, cutting, or grinding may require hospitalization. The authors indicate that inhalation of welding fumes may seriously aggravate the prognosis of pneumonia.

Several studies have reported an excess of mortality in welders due to pneumonia. In an early study, Doig and Challen (1964) found that deaths from all causes in welders were slightly higher than expected. The substantial part of the excess in mortality was due to pneumonia. The increased risk of pneumonia was not age-related, but was constant throughout the welder's working life. The authors were unclear on whether the acute pneumonia was caused by infectious microbes or by immunosuppression after excess exposure to the toxic components present in welding fumes. Beaumont (1980) observed a 67 % excess of pneumonia deaths in welders. The elevated occurrence of pneumonia was associated with elevated exposure to nitrogen dioxide and ozone. Silberschmid (1986) described a case of a welder who developed sudden work-related onset of pulmonary disease. Examination revealed swollen and red bronchial mucosa, irregular opacities in chest X-rays, and deficits in pulmonary function. Symptoms of exertional dyspnea, bronchial hyperreactivity, and recurrent episodes of pneumonia persisted for 7 years. Prior to the onset of disease, he had been working without proper

functioning local ventilation and was exposed to high concentrations of fume.

Coggon et al. (1994) analyzed three sets of occupational mortality data for England and Wales for the periods 1959-63, 1970-72, and 1979-1990 and found a significant increase in mortality from pneumonia among welders. Interestingly, retired welders did not have an excess in pneumonia deaths, leading the authors to rule out non-occupational confounding factors. The authors then concluded that there was a reversible effect of welding fumes on the susceptibility to pulmonary infection, and thus there was evidence to classify lobar pneumonia as an occupational hazard to welders. However, Kennedy (1994) disputed the association reported by Coggon et al. (1994), and noted that the excess rate of pneumonia may be due to a combination of increased susceptibility and increased exposure potential in all the metal trades and not just to welding fumes, specifically. It is possible that welders may be more susceptible to infection because of immunosuppression. In an immune system screening of 74 clinically healthy shipyard welders between the ages of 20-53 years of age, both immunoglobulin measurements and intradermal challenges led Boshnakova et al. (1989) to conclude that a significantly higher proportion of welders had evidence of deficiency in cell-mediated immunity. In a study of 30 regular welders and 16 control subjects, Tuschl et al. (1997) reported that many welders had experienced recurrent respiratory infections and that the only indication of immunosuppression was a reduction in natural killer cell activity. Because natural killer cells are important in host defense mechanisms against infection, the authors believed the reduced cytotoxic activity of immune cells from welders may be responsible for the reported increases in respiratory infections.

6.1.7 Lung Cancer

Welding fumes have not been definitely shown by epidemiology studies to be a cause of lung cancer. The potential association of the welding occupation and excess lung cancer incidence and mortality continues to be extensively examined. Several worker studies have indicated an excess risk of lung cancer among welders. In 1990, the International Agency for Research on Cancer (IARC) concluded that welding fumes were "possibly carcinogenic" to humans (IARC, 1990). However, the interpretation of the excess lung cancer risk is often difficult as there are obvious uncertainties in most studies such as inaccurate exposure assessment and lack of information on smoking habits and exposure to other work-related carcinogens, in particular asbestos (Hansen et al., 1996). Asbestos is associated with a very specific form of lung cancer, mesothelioma. Smoking is often associated with lung cancer and other debilitating lung diseases. In addition, several studies have indicated that a higher percentage of welders smoke as compared to the general population (Sterling and Wenkham, 1976; Dunn et al., 1980; Menck and Henderson, 1976). It has been suggested that MS welding, which accounts for the majority of all welding (~90 %), poses little risk for the development of

lung cancer (Stern, 1983). The risk is believed by some investigators to be confined to SS welding where potential human carcinogens chromium and nickel are present in significant levels in the fumes. *In vitro* genotoxicity studies have indicated that SS welding fumes are mutagenic in mammalian cells, whereas MS fumes are not (Hedenstedt et al., 1977; Maxild et al., 1978; Stern et al., 1988). However, epidemiology studies of welders have not conclusively demonstrated an increase risk of lung cancer after exposure to SS fumes when compared with MS fumes.

The formation of DNA-protein cross-links may play an important role in development of chemical-mediated genotoxicity (Costa et al., 1993a). Structural proteins that normally do not bind to DNA may become covalently cross-linked with DNA under the influence of chemicals, such as welding fumes which contain significant quantities of chromium and nickel. DNA modifications can influence the initiation and promotion of cancer. Inappropriate covalent DNA-protein cross-links disrupt gene expression and chromatin structure and may lead to deletion of DNA sequences during DNA replication, because these lesions are not readily repaired (Costa, 1991; Costa et al., 1993b). Costa et al. (1993a) proposed that the measurement of DNA-protein cross-link formation may represent a promising method to detect worker exposure to specific carcinogens. Popp et al. (1991) observed an elevation in DNA-protein cross-links in lymphocytes of welders as compared to controls matched for age, sex, and smoking habits. In a related study, Costa et al. (1993b) assessed the exposure of welders to chromium and nickel by measuring the number of DNA-protein cross-links in white blood cells. They found the percentage of cross-link to be significantly higher among welders (1.85 % $\pm$ 1.14) than among controls (1.17 % $\pm$ 0.46). They concluded that welders may be burdened with an excess of DNA-protein cross-links in cells indicating not only a biomarker of possible exposure to cross-linking agents but the presence of a lesion that may be an early indicator of other potential genotoxic consequences, such as the possible development of cancer.

Although several studies have examined the incidence of cancer in welders, the risk of cancer associated with welding has not been clearly established. In an early study, Menck and Henderson (1976), reviewed lung cases and deaths for 3,938 males aged 20-64 in Los Angeles County from 1968-1970 and 1972-1973. Welding appeared among occupations with a statistically significant increase in lung cancer deaths. It could not be determined whether this elevation in lung cancer risk was due to exposure to occupational carcinogens such as asbestos or polycyclic hydrocarbons, tobacco smoke, or air pollution. In a comprehensive epidemiologic study, Beaumont and Weiss (1981) examined the number of deaths from lung cancer among 3,427 welders in Seattle, Washington. The welders had worked in the occupation for at least 3 years between 1950-1976. Of the welders studied, 529 had died by 1976. Their lung cancer

rates were determined from death certificates and compared with age, sex, and race adjusted statistics for the total U.S. population and with the lung cancer death rates of 5,432 non-welders from the same union. Fifty of the welders died from lung cancer as opposed to 38 expected. The number of lung cancer deaths was statistically significant only when comparing the period 20 years after first exposure. No information concerning smoking history of the subjects was obtained, and no distinction was made between the effects of welding fume and of asbestos exposure which was believed to have occurred. Newhouse et al. (1985) examined the mortality rates of 1,027 welders and caulkers who worked in a British shipyard from 1940-1968. The number of deaths from all causes was slightly, but significantly higher than expected for welders. A statistically significant increase in mortality rate due to lung cancer was observed when the rates of welders and caulkers were combined. A population-based case-control study of the association between occupation exposure and lung cancer was conducted by Lerchen et al. (1987). The study group included 506 patients in New Mexico, ages 25-84 years old, with lung cancer. The control group consisted of 771 subjects which were matched for sex, ethnicity, and age. It was observed that welders had a significant elevation in lung cancer risk. The increased lung cancer risk persisted after adjusting for smoking habits and when those with shipyard experience were excluded to reduce the number of participants with possible asbestos exposure.

In a prospective lung cancer mortality study, Dunn et al. (1968) examined 14 occupational groups in California which included male welders with at least 5 years of occupational exposure. The statistical analysis indicated that the lung cancer death rate for welders was not significantly greater than the rate for the general population after age and smoking habits were considered. Walrath et al. (1985) reviewed mortality by previous occupation and smoking status among U.S. veterans. In the evaluation of 771 veterans with the occupation of welder or flame cutter, six out of the 144 deaths were due to lung cancer. In comparison with the general population with an adjustment for smoking habits, 6.5 deaths from lung cancer would be expected which was not significantly different from the expected number of cancer cases. Milham (1985) examined the number of deaths from cancer among the death records of 486,000 adult men filed in the state of Washington between 1950-1982. Welding was among nine occupations included in the study. No significant increase in lung cancer was observed among welders.

In a review of early epidemiology studies, Peto (1986) concluded that the association between welding fume exposure and bronchogenic carcinoma had not been adequately investigated. The studies reviewed indicated a 30-40 % excess lung cancer mortality among all welders. It was pointed out that many of the reviewed studies did not consider the confounding effects of tobacco smoking and other occupational and non-occupational exposures. In addition,

the number of cancer cases among welders in many of the studies was too small to provide an accurate estimate of risk. Peto (1986) also noted that many of the studies did not take into account the duration of the welding experience and the type of the welding processes used. As mentioned previously, Beaumont and Weiss (1981) suggested that the increased lung cancer risk in welders is not apparent until 20-30 years after the first exposure. Peto (1986) indicated that the reviewed studies did not sample enough welders with that prolonged of exposure. Also, he recommended focusing epidemiologic studies on populations of welders most likely to be exposed to carcinogens, such as chromium and nickel in the case of SS welding. It is estimated that 10 % of welders are exposed to SS welding fumes. Thus, studies which evaluated lung cancer incidence in all welders could underestimate the association seen in a 10 % subgroup of SS welders among the much larger group of all welders.

Several studies have examined the lung cancer rates in welders exposed to fumes which contained nickel and chromium specifically. In a cohort study, Sjogren (1980) assessed 234 Swedish SS welders who worked for at least 5 years between 1950-1965. Their death rates from all causes did not differ from those of the general population. Three welders did die from lung cancer as opposed to 0.68 expected deaths which was not statistically different from the general population. In a later study, Sjogren et al. (1987) compared the 234 SS welders in the previously described study as a group with high exposure to chromium with 208 railway track welders, an occupation expected to be exposed to low levels of chromium. Members of both groups had welded for a mean of 5 years. Although asbestos exposure could not be completely ruled out, welders elected for the study had not worked in areas where asbestos dusts were generated. At the end of a two year follow-up period, five lung cancer deaths had occurred in the SS group as compared to one in the railway welder group. These rates did not differ significantly from those of the general population, but the difference between the two groups of welders was statistically significant. A retrospective epidemiology study of 1,221 German welders who had been exposed to fumes containing nickel and chromium was conducted by Becker et al. (1985). Controls consisted of 1,694 machinists; and mortality statistics were collected from death certificates. During the study period, 77 welders and 163 machinists had died. The cancer mortality rate was significantly elevated in the welder group. In a case-referent study, Gerin et al. (1984) examined the relationship between lung cancer and nickel exposure. A total of 246 lung cancer cases was found among the 1,343 cancer participants of the study. It was observed that persons exposed to nickel had a three-fold increase in lung cancer. Of the occupations with nickel exposure, welding had the most “remarkable association” with lung cancer. Interestingly, welders without nickel exposure had little or no risk for lung cancer.

In 1990, after a review of 23 epidemiology studies examining the incidence of cancer in

welders, the IARC concluded that welding fumes were "possibly carcinogenic" to humans (IARC, 1990). The finding was based on limited evidence in humans and inadequate evidence in animals. Several studies performed after the conclusion by the IARC have indicated that workers exposed to welding fumes are at a greater risk of developing lung cancer when compared with workers in other occupations and the general public. There is, however, no general agreement concerning how much of the excess risk is due to welding fumes, which components in the welding fume could be responsible for the excess risk, and whether a large part of the risk can be attributed to factors such as smoking and asbestos exposure (Palmer and Eaton, 2001). In addition, despite the presence of chromium and nickel in SS welding fumes, recent studies have not definitely demonstrated a greater risk of lung cancer among SS welders as compared to MS welders.

Simonato et al. (1991) performed a comprehensive nine nation historical cohort study which pooled data from 21 case-control and 27 cohort studies of 11,092 welders in Europe. Analysis of the combined data from these studies showed a significantly greater mortality rate from lung cancer among welders as compared to men in the general population of the same countries. However, asbestos exposure was implicated as a confounding factor. It is important to note that the estimated cumulative dose of fume, total chromium, and Cr^{+6} from SS welding fumes were not observed to be significantly associated with mortality from lung cancer. In a study of 2,721 welders from five French factories, Moulin et al. (1993) reported a significant increase in lung cancer mortality among MS welders exposed for 20 or more years or had their first welding experience 20 years prior to the study. Danielsen et al. (1993) found that the lung cancer incidence among welders in a Norwegian shipyard was significantly higher than Norwegian males from the general population. It was concluded that there was an excess of lung cancer risk among MS welders, even after accounting for asbestos and smoking exposure. Steenland et al. (1991) performed a historical cohort study of 4,459 MS welders in the U.S. But unlike the Moulin et al. (1993) and Danielsen et al. (1993) studies, no trend of increased risk of cancer among MS welders with increased duration of welding exposure was observed. When welders were compared with non-welders directly for lung cancer, the risk ratio was 0.90. Of importance, all welders studied had an average duration of welding experience of 8.5 years with no occupation exposure to asbestos or SS fumes.

Several studies have performed re-analyses of early studies in attempts to remove confounders and establish a link between SS welding and lung cancer. Sjogren et al. (1994) conducted a meta-analysis of data from five studies of lung cancer among SS welders that had controlled for smoking and asbestos exposure. A significant increase in the relative risk for lung cancer was found among SS welders. Langard (1993) reviewed studies examining the risk of

lung cancer in workers exposed to chromium. Although the studies indicated a elevation in risk for lung cancer among SS welders, the risk was substantially less than that observed in studies of chromate workers. Another review by Langard (1994) evaluated studies that examined the risk of lung cancer to welders exposed to nickel and chromium. Even though the studies evaluated provided some evidence for an excess in lung cancer mortality in welders with long-term exposure to welding fumes, it was concluded that there was no definitive evidence to implicate nickel or chromium as the prime causative substances.

In more recent studies, Hansen et al. (1996) evaluated the cancer incidence in a historical cohort of 10,059 metal workers in Denmark. An increased incidence of lung cancer among all welders was not statistically significant, but non-welding metal workers and workers identified as having ever been employed either as a welder or by a welding company had a significantly increased incidence of disease. No correlation between the length of employment as a welder and risk for lung cancer was established. Moulin (1997) performed a meta-analysis of 36 independent studies which included 49 determinations of relative risks for lung cancer among different groups of welders. In all welding categories and in all types of studies, a significant elevated risk for lung cancer was observed as compared with the respective population and control groups. The relative risk of lung cancer for all welders was 1.38. There was no difference in the relative risks of MS and SS welding. Interestingly, the assumed greater exposure to asbestos among shipyard welders as compared to non-shipyard welders did not result in a greater risk for lung cancer. In a case-control study, Jockel et al. (1998) evaluated 839 male hospital cases of lung cancer and the same number of population-based controls who were matched by sex, age, and region of residence in Germany. The authors concluded that some, but not all, of the excess risk of cancers for welders may be due to smoking and asbestos exposure. In a historical follow-up study of 1,213 arc welders exposed to chromium and nickel and 1,688 controls in Germany following the years from 1989-1995, Becker (1999) reported that cancer mortality remained significantly increased as compared with the control group and the general population by 35 %. However, the increase in mortality from cancer of the respiratory tract was predominately due to mesothelioma, which is specific for asbestos exposure. No indication of an elevated cancer risk associated with chromium and nickel in welding fumes could be determined. Danielsen et al. (2000) examined the incidence of lung cancer among 4,480 shipyard workers which included 861 welders. Nine cases of lung cancer were found among the welders versus 7.1 expected. The authors concluded that there was no clear relationship between exposure to welding fumes and lung cancer. When the welders were compared with an internal control group of shipyard production workers, the findings indicated that exposure to welding fumes might enhance a welders' risk of developing lung cancer. The welders with the longest experience had

a relative risk for lung cancer of 1.90.

6.2 Non-Respiratory Effects

6.2.1 Dermatological and Hypersensitivity Effects

The skin can readily absorb ultraviolet radiation from the welding arc (Villaume et al., 1979). Burns from hot metal and ultraviolet radiation are quite common among welders. The severity of radiation injury depends on such factors as protective clothing, welding process, exposure time, intensity of radiation, distance from radiation source, wavelength, sensitivity of the subject, and the presence of skin-sensitizing agents in the body that are activated by the radiation. Skin sensitizing or irritating substances generated during welding include compounds and derivatives of chromium, nickel, zinc, cobalt, cadmium, molybdenum, and tungsten. Fumes from welding chromium steel have been shown to produce allergic dermatitis in persons sensitized to chromate (Fregert and Ovrum, 1963). Cr^{+6} was concluded to be the cause of the observed response. Jirasek (1979) reported on ten cases of hyperpigmentation of the skin which consisted of disseminated rusty brown macules similar to freckles on the bare forearms of welders. The macules were observed to disappear by 3-8 years after cessation of welding exposure. Contact eczema due to nickel was reported in unprotected welders (Weiler, 1979). A study from the Soviet Union indicated that 45 % of 117 welders suffered work-related lesions (Tsyrkunov, 1981). Of those, superficial and deep burns were the most common and present in 41 % of the welders. Ultraviolet radiation-induced dermatitis was detected on the face, hands, and forearms of 8.3 % of the welders. A case of a welder who seldom wore a protective face mask with recurrent, severe facial dermatitis was described by Shehade et al. (1987). The case was diagnosed as photodermatitis caused by ultraviolet exposure during welding. The welder's exposure to ultraviolet light was measured at times during the evaluation to be 128 times greater than the maximum permissible exposure level for an 8-hour day. In a study of 77 welders, 75 workers exposed to welding operations, and 58 non-exposed workers, it was observed that localized cutaneous erythema was frequent in welders and occasional in other exposed workers (Emmett et al., 1981). Erythema was generally localized and confined to unprotected areas of the body and common in the neck area of welders. In addition, there were no significant differences among the groups in the prevalence of various dermatoses, skin tumors, or premalignant lesions. The ultraviolet light produced during welding has been hypothesized to be a potential cause of skin cancer, however, the contribution of ultraviolet radiation to the incidence of skin cancer in welders is largely unknown. Epidemiological analysis of 200,000 cases of skin cancer was found not to be due to occupation (MacDonald, 1976). Currie and Monk (2000) did report on five cases of non-melanoma skin cancer which had occurred in welders which was possibly due to

non-solar ultraviolet radiation.

6.2.2 Central Nervous System Effects

Welding fume constituents such as lead, aluminum, and manganese have been suspected of causing neuropsychiatric symptoms in exposed workers in specific occupations. It has been clearly established that manganese is a neurotoxicant when inhaled in high concentrations by workers involved in steel production or in the mining and processing of manganese ores (Donaldson, 1987). Recent evidence suggests that long-term exposure to low levels of manganese oxides may cause neurofunctional changes in ferro-alloy workers (Lucchini et al., 1999). The question of whether or not manganese present in welding fumes causes neurological problems remains unclear. Manganese neurotoxicity in humans is a well-documented distinct clinical neurotoxic syndrome that resembles Parkinson's disease (Barbeau et al., 1976). It is characterized by elevated manganese levels in the basal ganglia associated with irreversible brain disease, characterized initially by a psychiatric disorder which closely resembles schizophrenia. Ataxia ensues followed by an extrapyramidal movement syndrome.

The development of possible neurologic changes in welders has been examined. Toxic manifestations of manganese were not observed in a group of 14 assembler/grinders and 1 welder involved in the fabrication of a railroad track from an alloy containing approximately 12 % elemental manganese (Kominsky and Tanaka, 1976). Chandra et al. (1981) measured the manganese content of the urine and signs of neurological injury in 60 welders from three separate plants with different ventilation controls and exposure to varying levels of manganese. Positive neurological signs were seen in some welders from all plants. The urine manganese levels were higher than controls in workers with positive neurological changes. They also found that the presence of neurological symptoms did not correlate with the duration of exposure to welding fumes. Anatovskaia (1984) surveyed the neurological status of 54 welders, 92 foundry workers, and 34 grinders suffering from chronic bronchitis at an occupational health clinic in Russia. Similar neurological symptoms which included weakness, exhaustion, fatigue, apathy, dizziness, imbalance, numbness in the extremities, irritability, and memory loss were seen among all three occupational groups. The degree and frequency of nervous system changes increased with the severity of bronchitis. Rasmussen and Jepsen (1987) reported on two cases of welders who had advanced stages of manganese poisoning with symptoms of Parkinsonism. Both welders performed shielded MMAW in a boiler factory, one for 17 years and the other for 31 years. Hygienic conditions in the factory were reported to be poor. In an OSHA report, Fanek (1994) described a case of manganese poisoning in a welder who had worked on railroad tracks without respiratory protection for approximately 18 years. He had elevated blood manganese levels (11.3 µg/L) and had developed all the classic signs and symptoms caused by long-term manganese

exposure. Nelson et al. (1993) described a case of an arc welder of 25 years who presented with severe manganese poisoning. The welder was involved with repairing railroad tracks composed of manganese-steel alloy. In addition, he had worked for 15 years indoors without local exhaust, where he welded and cut castings composed of 20 % manganese. He eventually developed insomnia, lassitude, progressive confusion, poor memory, impaired cognition, paranoia, and loss of muscle control. Magnetic resonance imaging (MRI) identified deposits of manganese in the basal ganglia and midbrain.

In the evaluation of central nervous effects of aluminum, Sjogren et al. (1990) used a questionnaire to assess the neuropsychiatric symptoms in 65 aluminum welders and 217 railroad track welders in Sweden. Logistic regression was used to examined the relationship among exposure, age, and occurrence of neuropsychiatric symptoms. Even though it was determined that welders exposed to aluminum, lead, or manganese for long periods of time had significantly more neuropsychiatric changes than welders not exposed to those metals, the results were subjective and may reflect metal exposure in general which was unrelated to welding. The authors also suggested that detailed psychometric studies were needed to make definitive conclusions. Hanninen et al. (1994) examined 17 male aluminum welders from a shipbuilding company in Finland and conducted a series of neuropsychological tests and assessed serum and urine aluminum levels. The scores for the tests for psychomotor, visual, and spatial abilities fell within the "good-average range" and the scores for the memory and verbal ability tests were within the "average" range. However, there was a negative association between the memory tests and urinary aluminum, and a positive association between visual reaction times and exposure. The authors concluded that the statistical significance of the exposure-effect associations for the neuropsychological tests was modest and the results are only suggestive of an association, possibly due to the small sample size of the study.

In a case-control study, Gunnarsson et al. (1992) examined risk factors for motor neuron disease, a fatal, progressive, neurodegenerative disorder. The occupational histories and exposures of 92 cases of the disease were compared with 372 age-matched controls. Welding was one of the occupations reported to be associated with a significant risk to the disease. Camerino et al. (1993) used computerized tests to study potential neurobehavioral abnormalities, including reaction time, learning ability, visual recognition, and mood states, of workers exposed to different occupational neurotoxins. Eighteen welders exposed to aluminum were included in the study population. Only the workers exposed to lead and zinc displayed abnormalities in the tests. There were no observed differences reported for the performance of welders and controls in any of the tests. A case-control study performed by Strickland et al. (1996) evaluated the development of the motor neuron disease, amyotrophic lateral sclerosis (ALS; Lou Gehrig's

Disease). The strongest association with ALS was exposure to welding or soldering materials as well as working in the welding industry. The authors speculated that lead might be the responsible toxicant because it is present in both welding and soldering.

The central nervous system effects of both manganese and aluminum were examined in welders by Sjogren et al. (1996). A comprehensive battery of psychological and neurological tests was administered to groups of welders with a history to exposure to either metal. The aluminum welders (n = 38) had approximately 7 times higher the urinary aluminum concentration and reported more neurological changes and decreases in motor function tests than controls (n = 39). In addition, the observed effect was dose-related in two of the tests. The welders exposed to manganese (n = 12) had significantly lower scores in 5 motor function tests and reported a higher degree of sleep disturbances than did controls. However, the welders did not have higher concentrations of manganese in the blood as compared to controls. The authors noted that subtle differences in motor function were observed in aluminum welders with urinary aluminum concentrations of 50 µg/L and recommended that measures should be taken to reduce aluminum exposures among welders. They also concluded, that despite the low blood concentrations and short duration of exposure, manganese was the likely cause of consistent disturbances in motor function observed in some of the welders studied. They recommended that the work environment for welders using high alloy manganese electrodes should be improved.

In a case-control study, Racette et al. (2001) compared the clinical features of Parkinson's Disease in 15 full-time welders with 2 control groups with an idiopathic form of the disease. It was observed that the welders had a younger onset (46 years) of the disease that was significantly different than the onset (63 years) in the controls. There were no differences observed in any of the motor function tests between the welders and the controls groups. Motor test fluctuations and dyskinesias occurred at a similar frequency among all groups. The authors concluded that Parkinson's Disease in welders was distinguished clinically only by age at onset, suggesting that welding may be a possible risk factor for the development of a Parkinson-like syndrome. However, their findings could not definitively prove whether manganese was the causative agent, and that is was possible that different components of the fume and other occupational and environmental exposures could be responsible for the neurological changes observed.

6.2.3 Reproductive Effects

Early studies concluded that welding had little affect on fertility. Haneke (1973) surveyed 61 male arc welders and found no association between welding and fertility abnormalities. Kandracova (1981) evaluated fertility disorders in 4200 male workers in which 69 were welders, 192 were pipe fitters, and 57 were car mechanics. The remainder, which were never exposed to welding fumes, served as controls. The frequency of abnormalities was the same among all

occupational groups, and it was concluded that the frequency of fertility disorders among welders was the same as that of workers in other professions. Jelnes and Knudsen (1988) observed no differences in any of the parameters tested for male reproductive function when comparing 20 MMAW with 11 control subjects. Bonde and Ernst (1992) studied the semen quality of 30 SS welders, 30 MS welders, and 47 controls. They observed no correlation between chromium levels in the blood or urine due to SS welding and deterioration in semen quality due to welding. On the other hand, Mortensen (1988) used a postal questionnaire combined with semen analysis to sample 1255 male workers and reported a 2-fold increase in the risk of fertility abnormalities in welders. The risk was even higher for SS welders at 2.34 times more than controls. In a cross-sectional study, Bonde (1990) examined semen quality in 35 SS welders, 46 MS welders, and 54 non-welders. A dose-response relationship between MS fume exposure and decreasing sperm quality was observed. Decrements in sperm quality were also seen in welders exposed to SS fume. In a later study, Bonde (1992) studied 17 male welders who were sufficiently protected from fume exposure by exhaust ventilation and compressed air respirators. It was concluded that a significant reversible decrease in semen quality was observed in the welders, but it was most likely due to radiant heat exposure and not by inhalation of welding fumes. Wu et al. (1996) examined the effects of exposure to manganese and welding fumes on semen quality in 63 manganese miners, 110 shipyard welders, 38 machine shop welders, and 99 control subjects in China. It was concluded that manganese may have a toxic effect on sperm quality. In a review of the literature examining the effect of occupational exposures on male reproduction function, Tas et al. (1996) indicated that specific metals which are common in welding fumes may have toxic effects on reproduction function. Cadmium and lead were implicated as metals which may cause reproductive problems in male workers.

7.0 Animal Studies

7.1 Cytotoxicity Studies

Many studies have been performed to examine the effect of welding fumes on cell viability. The alveolar macrophage has been the cell type most often used in these investigations. The macrophage is easily isolated from the lungs by a commonly used procedure called bronchoalveolar lavage. Macrophages serve as the first line of cellular defense (Brain, 1986). They play a central role in maintaining normal lung structure and function through their capacity to phagocytize inhaled particles, remove macromolecular debris, kill microorganisms, function as an accessory cell in immune responses, maintain and repair the lung parenchyma, and modulate normal lung physiology (Crystal, 1991). Stern and Pigott (1983) and Pasanen et al. (1986) demonstrated that MMAW-SS fumes were much more cytotoxic to rat macrophages than fumes

from a variety of other welding processes. Hooftman et al. (1988) have shown that bovine lung macrophage viability and phagocytosis were greatly reduced by particles generated in MMAW welding using SS electrodes as compared to welding using MS materials. It was also shown that MMAW-SS fumes were more cytotoxic and induced a greater release of highly reactive oxygen species when compared to GMAW-MS fumes (Antonini, et al., 1997). In a recent study, the soluble components of a MMAW-SS fume sample were shown to be the most cytotoxic to macrophages and to have the greatest effect on their function as compared to the GMAW-SS and GMAW-MS fumes (Antonini et al., 1999) Neither the soluble nor insoluble forms of the GMAW-MS sample had any marked effect on macrophage viability. The soluble fraction of the MMAW-SS samples was comprised almost entirely of chromium. It has been well-established that Cr^{+6} is a carcinogen and is often present in the water-soluble form in fumes generated during welding of SS materials (Griffith and Stevenson, 1989; Sreekanthan, 1997). White et al. (1979) concluded that the cytotoxic effects of a SS welding fume on the human cell line NHIK 3025 is almost entirely due to Cr^{+6}. Glaser et al. (1985) found an increase in the phagocytic activity of recovered alveolar macrophages after rat inhalation exposure to low concentrations of the highly soluble Cr^{+6} form, sodium dichromate ($Na_2Cr_2O_7$). While at higher concentrations, the phagocytic activity decreased which was likely due to an increase in macrophage death. Johansson et al. (1986) observed morphological changes and a reduction in the metabolic and phagocytic activities of rabbit alveolar macrophages after inhalation exposure to Cr^{+6}. Sodium chromate ($NaCrO_4$), another water-soluble form of Cr, was found to be highly cytotoxic in a concentration-dependent manner to murine peritoneal macrophage (Christensen et al., 1992).

7.2 Genotoxicity and Mutagenicity Studies

As discussed previously, a number of epidemiological studies have focused on possible induction of cancer in welders, particularly due to the presence of chromium and nickel in welding fumes. Several studies have been performed to assess the genotoxic effects of welding fumes and welding fume components. Assays of genotoxicity examine whether a substance causes mutations in the genetic material. This is important because some human diseases, such as cancer, may be caused by such alterations in DNA. It has been previously reported that SS welding fumes were mutagenic in the Salmonella assay and toxic to mammalian cells, whereas MS welding fumes had little mutagenic activity (Hedenstedt et al., 1977; Maxild et al., 1978). Fumes from MMAW of SS electrodes were shown to have a toxic and transforming effect on baby hamster kidney (BHK) cells which was attributable to the Cr^{+6} of the fume (Hansen and Stern, 1985). They also indicated that relatively insoluble Cr^{+6} compounds showed a higher toxic and transforming effect in the BHK assay than soluble Cr^{+6}. On the other hand, Elias et al. (1991) demonstrated that the solubilization of Cr^{+6} compounds is a critical step for their cytotoxic

and transforming activities in hamster embryo cells. Baker et al. (1986) indicated that the soluble and insoluble fractions of a MMAW-SS fume induced sister chromatid exchange in proportion to Cr^{+6} content, and contributions from other fume constituents such as Cr^{+3}, fluorides, nickel, and manganese were minor. However, mitotic delay could not be explained in terms of the Cr^{+6} concentration alone, indicating that other components of the fumes may be involved. Biggart et al. (1987) have shown MS welding fumes to contain direct-acting and pro-mutagenic components which were water-insoluble and did not contain Cr^{+6}.

In the assessment of nickel, Niebuhr et al. (1981) examined a welding fume rich in nickel and discovered it to be highly mutagenic with most of its transforming potential coming from the fume fraction which was soluble in serum. Utilizing the BHK *in vitro* bioassay, Hansen and Stern (1983) determined the relative transformation potential of a number of nickel compounds, including the known human carcinogen, nickel subsulfide ($-Ni_3S_2$), and different occupationally-relevant nickel oxides. They found that all the nickel substances tested had the same transformation potency which was independent of nickel source or cellular uptake. Using Syrian hamster embryo (SHE) cells, Hansen and Stern (1986) also found that the toxicity of SS fumes from GMAW was substantially greater than expected on the basis of their Cr^{+6} content. The increased transformation potential was believed to be due to the nickel content of the fumes. They found that the transforming effects of SS fumes which did not contain any detectable nickel, corresponded to levels from their content of Cr^{+6}.

7.3 Pulmonary Inflammation, Injury, and Fibrosis

A number of studies have used laboratory animals to evaluate the effect of different welding fumes on lung inflammation and injury. Many studies have incorporated the method of intratracheal instillation to deliver the fumes to the lungs of the animals. Even though intratracheal instillation is less physiologic than the inhalation of the particles, there are advantages to the method (Brain et al., 1976; Driscoll et al., 2000; Reasor and Antonini, 2001). The actual dose delivered to the lungs of each animal is very uniform and can be measured accurately. The procedure is easy to perform and far less expensive when compared to the complex technology needed for aerosol generation and inhalation chamber construction. In one study utilizing this procedure, White et al. (1981) intratracheally instilled rats with titanium dioxide (a mineral of low biological activity) and different welding fumes at doses which ranged from 0.5-5.0 mg/animal and measured the cellular and biochemical effects in the lungs. The results of their study suggested that a single instillation of MMAW-SS fumes had a greater acute toxic effect in the lungs 7 days post-instillation as compared to MS fumes and titanium dioxide. To further characterize their findings, White et al. (1982) administered to rats a single intratracheal instillation of soluble and insoluble fractions of stainless steel welding fumes and

potassium dichromate ($K_2Cr_2O_7$) containing concentrations of Cr^{+6} found in welding fumes. They observed that most of the toxicity of the welding fumes 7 days post-instillation was related to the content of soluble Cr^{+6}. The inflammation they observed subsided over time, leading them to conclude that this was due to the removal of the soluble Cr^{+6} from the lungs.

Hicks et al. (1984) studied the histopathological changes of rat lungs after a single intratracheal instillation of very high doses (10 or 50 mg/rat) of MMAW-MS and GMAW-SS welding fumes. They observed widespread deposits of fumes in deep alveoli and in alveolar ducts where macrophage aggregates had formed after treatment with both fumes. MMAW-MS fumes had been cleared more effectively from the alveoli surrounding the deposits. The GMAW-SS particles were more widely spread and cells laden with these were more frequently associated with clumps of free particles. Massive nodular aggregates were a major feature of the lungs after treatment with both fume types. Evidence of fibrosis was observed in the nodules of the MMAW-MS-treated lungs.

In other studies where welding fumes were intratracheally instilled into the lungs of rats, Antonini et al. (1996; 1997) compared different welding fumes in regard to their potential to elicit lung inflammation and injury and examined the possible mechanisms whereby welding fumes may damage the lungs. It was demonstrated that welding fumes generated from different processes and electrodes produced different pulmonary responses and were cleared from the lungs at different rates. GMAW-SS and MMAW-SS fumes were more pneumotoxic and were retained in the lungs longer when compared to MS fumes. Detectable levels of the inflammatory cytokines, TNF- and IL-1 were measured in the lungs of the rats exposed to the GMAW-SS and MMAW-SS fumes. The increased pulmonary persistence and the presence of the inflammatory cytokines within the lungs may explain the increases observed in the lung injury and inflammation caused by the GMAW-SS and MMAW-SS fumes. However, unlike the highly pneumotoxic and fibrogenic mineral particle, crystalline silica, it appears that SS welding particles are eventually cleared from the lungs and thus, the potential for chronic lung damage, such as fibrosis, is low at intratracheal instillation doses of 2 mg/rat. The authors also noted in these studies that MS welding fumes induced a transient, highly reversible pulmonary response which was quite similar to iron oxide, a mineral particle characterized as a nuisance dust with little inflammatory and fibrogenic potential. In a related study, Antonini et al. (1998) intratracheally instilled freshly generated SS welding fumes or fumes which had been aged for 1 and 7 days. They demonstrated that freshly generated SS fumes induced greater inflammation and injury than aged fumes, indicating that this was due to a higher concentration of free radicals on the fume surfaces. It was concluded then that workers exposed to freshly formed fumes at active welding sites may be at a greater risk in developing lung disease.

Even though there are advantages to using the intratracheal instillation procedure to treat laboratory animals with welding fumes, there is one important disadvantage- exposure to the irritant gases which are formed during the welding process is absent. Several studies have constructed welding inhalation chambers to expose laboratory animals. Hewitt and Hicks (1973) exposed rats to a MS welding fume for 4 hours and measured significant lung deposition of iron with only minor histopathological signs of pulmonary irritation. Uemitsu et al. (1984) exposed rats to a single inhalation or repeated inhalations to MMAW-SS and MMAW-MS fumes. Histopathological signs of pulmonary irritation, such as mucus granules in the alveoli and hyperplasia of mucus cells in the bronchial epithelium were observed only in the rats exposed to the SS fume. In a larger scale inhalation study, Coate (1985) exposed rats to a single inhalation of welding fumes from different processes at a concentration of 0.6 mg/l for 6 hours. MMAW-SS fumes demonstrated the most severe morphological changes and inflammatory cell infiltration and were considered the most toxic fume studied. Two GMAW fumes using different MS electrodes caused little histopathological changes in the lungs of the exposed rats and were regarded as non-toxic. Naslund et al. (1990) exposed sheep to a MS welding fume by inhalation for 3 hours/day for five weeks. They demonstrated that the metals- iron, magnesium, and manganese, had accumulated in the lungs. It was determined that manganese levels were elevated 40 times. Yu et al. (2000) designed a novel welding fume generating system to expose rats. They exposed rats to 62 mg/m^3 for 4 hours to a SS fume and examined the lungs at different time points post-exposure. The welding particles were shown to deposit mainly from the small bronchioles to the gas exchange regions; macrophages in the bifurcating regions of the bronchioles were laden with impacted welding fumes. However, no significant histopathological change was observed in any region of the respiratory tract at any time point after the 4 hour exposure. The same group investigated welders' pneumoconiosis by establishing a lung fibrosis model (Yu et al., 2001). Rats were exposed to a SS welding fumes with concentrations of 57-67 mg/m^3 (low dose) or 105-118 mg/m^3 (high dose) for 2 hours/day in an inhalation chamber for 90 days. Histopathological examination indicated that the lungs from the low dose group did not exhibit any progressive fibrotic changes, whereas the lungs from the high dose group exhibited early signs of fibrosis at day 15. Interstitial fibrosis appeared at day 60 and became prominent by day 90. The authors concluded that exceedingly high doses of SS welding fumes are needed to induce interstitial pulmonary fibrosis.

7.4 Pulmonary Deposition, Dissolution, and Elimination

Many animal studies have evaluated the fate of welding fumes and their constituents after administration to the lungs. Lam et al. (1979) radiolabeled the individual metals of welding fumes by neutron activation and indicated that the removal of certain metallic components of the

fume deposited in the lungs occurred at different rates, dependent on the *in vivo* solubility of the specific metal. They observed that the fume particles were eliminated in three phases. Phase I represented mucociliary clearance from the lungs and airways, clearing deposited particles into the gastrointestinal tract. The eliminated metal constituents appeared in the fecal material and had rather quick elimination half-lives of less than one day. While the quantitative characteristics of different welding fume samples differed, the retention constants and half-lives of each element of a particular welding fume had very similar values. This indicated that the eliminated particles in phase I were transported in their entirety, without separation of its constituents. Phase II was attributed to phagocytosis and transport of particles by lung macrophages. This was a slower process and would account for longer half-life constants of up to a week. Also, the retention constants and half-lives for the various elements in a particular welding fume sample were remarkably consistent, indicating that the particles were still being transported in a largely unchanged state. A portion of the phagocytized material from the lower airways was transported through the mucociliary elimination route to the gastrointestinal tract. The remainder was cleared from the alveolar compartment and had deposited in peribronchial and subpleural areas. This residue was the material affected by the much slower phase III clearance processes, having biological half-times of several weeks. Unlike phases I and II, the various elements of a particular fume cleared from the lungs at very different rates during phase III, indicating a separation of the material and is attributable to the tissue solubility of each element. In continuation of this work by neutron irradiating welding fumes, Al-Shamma et al. (1979) observed that the major elimination route of the different components of welding fumes was via the gastrointestinal tract, but some systemic distribution of soluble constituents, such as iron, chromium, cobalt, and nickel occurred via the blood, thus posing the question of whether long term accumulation of different metals due to inhalation of welding fumes might lead to significant toxicity of various vital organ systems, such as the brain/central nervous system.

In 1982, Kalliomaki et al. introduced a method of assessing the pulmonary clearance of a SS welding fume by magnetically measuring exogenous iron. Along with atomic absorption measurements of the blood and different organs, they observed the half-times of chromium and iron lung clearance to be similar with nickel disappearing faster (Kalliomaki et al., 1983b). In a comparison between SS and MS welding fumes, Kalliomaki et al. (1983c) observed a linear relationship between the amount of SS fume retained in the lungs with the duration of exposure, whereas the retention of the MS fume in the lungs was saturated as a function of cumulative exposure time rates. They found that alveolar retention of SS fumes after four weeks of exposure were four times higher than that of MS fumes. The fast clearance component found for the MS fume was lacking in the clearance pattern for the SS fume. Also using magnetometry, Antonini

et al. (1996) found that SS fumes were cleared from the lungs of rats significantly slower than MS fumes. Half-life of the SS fumes after intratracheal instillation was found to be 47 days, whereas the half-life for the instilled MS fumes was only 18 days. Using x-ray quantitative microanalysis, Antilla (1986) found that MMAW-SS fumes had two particle populations of different behavior in rat lungs after inhalation exposure. The particles of the principal population dissolved in both macrophages and type 1 epithelial cells in about two months. Fast and slow dissolving components of chromium, manganese, and iron were detected within these particles. The particles of the minor population showed no size of dissolution during three months of follow up. Rats exposed to SS fumes generated using GMAW had only one population of particles in their lung tissue. No particle solubility was detected within three months as they were similar to those of the minor population in the MMAW-SS fumes.

7.5 Lung Carcinogenicity

Only a few *in vivo* animal studies examining the development of cancer after exposure to welding fumes have been performed. Migai and Norkin (1965) intratracheally instilled 10 rats with a suspension of 50 mg of a SS welding fume which contained significant amounts of manganese, chromium, and fluoride. Rats were sacrificed 1.5 years after exposure and exhibited no evidence of lung tumor formation. Another 10 rats were then exposed to the same exact fumes for 9 months and similarly showed no formation of lung tumors. The possible bronchocarcinogenic effects of SS fumes during MMAW and GMAW welding were examined in 70 hamsters by intratracheal instillation of 0.5 or 2.0 mg of either fume (Reuzel et al., 1986). Following once-weekly administrations for 340 days, the hamsters treated with the high doses of the fumes, showed increased lung weight, interstitial pneumonia, and emphysema. Histological examination revealed 2 malignant lung tumors in the MMAW-exposed group, whereas none were detected in any other group. In another study, Berg et al. (1987) collected and implanted welding fume particles as pellets in the bronchi of groups of 100 rats. The particles were shown to contain both Cr^{+3} and Cr^{+6} in soluble and insoluble forms. After 34 months, no significant differences were noted in growth rates, survival times, terminal organ weights, and pre-cancerous tumors at the implantation site between the test and negative control groups. One rat, which received a pellet containing welding fumes, showed squamous cell carcinoma remote from the implantation site and not associated with the bronchus. By contrast, a positive control group exposed to pellets of benzo(a)pyrene developed epithelial cell tumors in all rats. However, the significance of the negative findings may be in question because the implantation technique may not adequately mimic actual human inhalation exposure in terms of deposition, absorption, and bioavailability of the welding fumes particles.

7.6 Pulmonary Function

Studies using laboratory animals to assess the effects of inhaled welding fumes on pulmonary function are lacking.

7.7 Immunotoxicity

Animal studies investigating the effects of welding fumes on the immune system are limited. Cohen et al. (1998) examined the immunotoxic effects of soluble and insoluble Cr^{+6} on alveolar macrophage function during concomitant inhalation exposure to ozone. Rats were exposed for 5 hours/day, 5 days/week for 2 or 4 weeks to atmospheres containing soluble potassium chromate (K_2CrO_4) or insoluble barium chromate ($BaCrO_4$), each alone or in combination with 0.3 ppm ozone to simulate a welding fume exposure. They observed that the K_2CrO_4-containing atmospheres modulated lung macrophage production of IL-1 , IL-6, and TNF- to a greater degree than those containing $BaCrO_4$. However, co-inhalation of ozone did not result in modulation of macrophage immunotoxic effects with either soluble or insoluble Cr^{+6}. Their results did indicate that, while the immune effects of Cr^{+6} on macrophages are related to particle solubility, the co-inhalation of ozone did not cause further modifications of the metal-induced effects.

Yamamoto et al. (2001) have demonstrated that inhalation of fluoride (a common component in welding electrode fluxes) suppressed lung antibacterial defense mechanisms in mice. Pulmonary bactericidal activity of *Staphylococcus aureus* was decreased in a concentration-dependent manner after exposure to 5 and 10 mg/m^3 of fluoride for 14 days for 4 hours/day. In a related study, pre-exposure of rats to a highly soluble MMAW-SS fume (and not to insoluble GMAW-SS and GMAW-MS fumes) before pulmonary inoculation with *Listeria monocytogenes* significantly impaired the clearance of the bacteria from the lungs, severely damaged the lungs, increased animal mortality, and suppressed bacterial killing by the macrophages (Antonini et al., 2001). These studies appear to indicate that certain welding fumes may increase the susceptibility to infection in welders.

7.8 Dermatological and Hypersensitivity Effects

Hypersensitivity and skin studies of welding fumes in animals are limited. Welding fumes generated during GMAW and MMAW processes were studied for their ability to induce experimental hypersensitivity in female guinea pigs (Hicks et al., 1979). Using a variety of different methods to test for the induction of skin hypersensitivity, it was determined that exposure to GMAW fumes produced 23 positive reactions in a total of 40 animals, whereas fumes from MMAW welding were less effective, producing only 10 positive reactions out of 40. Repeated skin contact with chromium salts have been shown to produce allergic dermatitis (Hicks and Caldas, 1986; Caldas and Hicks, 1987). These studies reported that exposure of the lungs to chromate or extracts of SS welding fumes rich in chromium and nickel can inhibit this

reaction. Guinea pigs receiving dermal injections of chromate developed skin hypersensitivity reactions in response to further dermal challenge with chromate. This response was inhibited in animals given repeated intrapulmonary injections of potassium chromate or potassium dichromate before skin sensitization. Pretreatment of the lungs with a nickel salt did not alter the dermal response to chromate, indicating that pulmonary exposure to chromium salts provokes a specific tolerance to the immunologic effects of chromium.

7.9 Central Nervous System Effects

Animal studies assessing the effects of welding fumes on the central nervous system are limited. There is concern about the neurotoxic effect of manganese in welding fumes. The route of exposure can influence the distribution, metabolism, and potential for neurotoxicity of manganese (Andersen et al., 1999). The inhalation route is more efficient at delivering manganese to the brain when compared with ingestion as evidenced by inhalation being the most common route of exposure for manganese intoxication (Davis, 1998). Important determinants in the neurological outcome of metal exposure are the rate and means of transport from the circulation into the brain across the blood-brain barrier. There is evidence that transferrin, the principal iron-carrying protein of the plasma, functions prominently in metal transport across the blood-brain barrier. Transferrin has been shown to enter brain endothelial cells via receptor-mediated endocytosis and to subsequently enter the brain (Fishman et al., 1985). In the absence of iron, binding sites on transferrin may accommodate other metals. It has been demonstrated that the transport of manganese across the blood-brain barrier occurs via the transferrin-conjugated transport system (Aschner and Gannon,1994) and in both divalent and trivalent oxidation states (Aschner et al., 1999). Because manganese may compete for the same binding sites on transferrin, high concentrations of iron present in plasma may greatly affect the transport of manganese across the blood-brain barrier and thus influence the potential of manganese-induced neurotoxicity caused by welding fume exposure. A pilot study was performed by Molina et al. (2000) to test this hypothesis. The investigators attempted to determine the effects of experimental perturbations in body iron on the pharmacokinetics of intratracheally instilled radiolabeled $^{54}MnCl_2$. Healthy young rats were either repeatedly bled for one week to reduce stored iron or were repeatedly exposed to an aerosol of respirable iron oxide particles for a period of two weeks to increase body stores of iron. They found that the amount of iron in the lungs affected the rate of transport of ^{54}Mn from the airspaces to the blood. Significantly less ^{54}Mn was found in the blood of rats exposed to repeated inhalations of iron oxide, but more ^{54}Mn was in the blood of the repeatedly bled rats. In addition, the distribution of ^{54}Mn in different organs was also significantly altered by iron status. Over the three day period, total brain ^{54}Mn uptake was negligible (always <0.2 % of the instilled dose). They concluded that increased iron levels in the

lungs decreased transport of ^{54}Mn through the air-blood barrier and reduced the subsequent uptake from the blood to other organs over a three day period.

Another factor that may enhance the efficiency of manganese accumulation in the brain after inhalation is olfactory transport- a route of direct delivery from the nose to the brain (Brenneman et al., 2000). During direct olfactory transport, the blood-brain barrier is bypassed as inhaled chemicals are taken up and conveyed along cell processes of olfactory neurons to synaptic junctions with neurons of the olfactory bulb. At least in the rat, olfactory transport has been shown to be a rapid means of manganese uptake by brain structures (Gianutsos et al., 1997; Brenneman et al., 2000). However, the relevance of these findings to human manganese inhalation exposure and the risks for neurotoxicity are not known and are complicated by interspecies differences in nasal and brain anatomy and physiology (Brenneman et al., 2000). In the rat, the olfactory bulb accounts for a significantly larger portion of the central nervous system as compared to humans (Gross et al., 1982). In addition, rats are obligatory nasal breathers, but humans are oronasal breathers. It has been reported that up to 16.5 % of the inhaled air stream is estimated to reach the olfactory mucosa in the rat, whereas only about 5 % of the inhaled air stream reaches the olfactory region in humans (Schreider, 1983; Kimbell et al., 1997). Because of these differences rats may be more prone to olfactory deposition and transport of manganese and other inhaled toxicants when compared with humans. The study of olfactory transport in the rat then may be a poor model for manganese neurotoxicity in humans. Exposure to manganese does not cause the behavioral and pathological changes characteristic of magnanism in humans (Brenneman et al., 1999).

In another study evaluating the effect of welding fumes specifically on neurotoxicity, Hudson et al. (2001) studied the solutes from selected welding fumes generated from model processes on their potential to promote oxidation of dopamine and peroxidation of brain lipids. It was observed that specific welding fume extracts enhanced dopamine oxidation and inhibited lipid peroxidation, and the magnitude of response was influenced by such welding parameters as the voltage/current and types of shield gases and electrodes. The authors concluded that hazards from welding should be assessed in terms of the entire exposure system and not as individual components within the welding apparatus. They noted that it was imperative to understand that modifications to the welding process may solve one problem but create other hazards.

7.10 Reproductive and Fertility Effects

The effect of welding fumes on reproduction in female rats was studied by Dabrowski (1966a). A total of 75 female rats were exposed to a MS welding fume for 32, 82, or 102 days. The rats were then mated with unexposed male rats at the end of their exposure periods. The exposure to the welding fumes decreased the number of pregnant females, litter size, and fetal

weight as well as caused histopathological changes in the female reproductive organs. To study the effects of welding fumes on male rats, Dabrowski et al. (1966b) exposed two groups of mature male rats to the same MS fume in the female study. One group of male rates were exposed for 100 days, and immediately mated with unexposed females after the exposure period. None of the female rats became pregnant. Another group of male rats were exposed for 100 days, allowed to recover for 80 days, and then mated with unexposed females. Only 4 out of 16 rats became pregnant. Histological examination of the testes of rats showed edema and signs of degenerative changes, such as desquamation and degeneration of germinal epithelial cells. Ernst and Bonde (1992) exposed rats 5 days/week for 8 weeks to intraperitoneal injections of a Cr^{+6} compound. In rats examined after the exposure period, there was significant reduction in the number of motile sperm and serum testosterone levels. Serum concentrations of both luteinizing hormone (LH) and follicle-stimulating hormone (FSH) were significantly increased. All of the sperm parameters and most of the hormone levels had returned to normal after an 8 week recovery period.

8.0 References

Agency for Toxic Substances and Disease Registry. (1992). In *Toxicological Profile for Manganese*. (U. S. Department of Health and Human Services, Public Health Service, Agency for Toxic Substances and Disease Registry, Eds.), Publication No.91-19.

Akbar-Khanzadeh, F. (1980). Long-term effects of welding fumes upon respiratory symptoms and pulmonary function. J. Occup. Med. 22:337-341.

Akbar-Khanzadeh, F. (1993). Short-term respiratory function changes in relation to work shift welding fume exposures. Int. Arch. Occup. Environ. Health 64:393-397.

Akselsson, K. R., Desadeleer, G. G., Johansson, T. B., and Winchester, J. N. (1976). Particle size distribution and human respiratory deposition of trace metals in indoor work environments. Ann. Occup. Hyg. 19:225-238.

Alpaugh, E. L., Phillippo, K. A., and Pulsifer, H. C. (1968). Ventilation requirements for gas metal arc welding. Am. Ind. Hyg. Assoc. J. 29:551-557.

Al-Shamma, K. J., Hewitt, P. J., and Hicks, R. (1979). The elimination and distribution of components of welding fumes from lung deposits in the guinea pig. Ann. Occup. Hyg. 22:33-41.

Anatovskaia, V. S. (1984). Status of the nervous system in chronic bronchitis. Vrach. Delo 2:88-91.

Andersen, M. E., Gearhart, J. M., and Clewell, H. J. (1999). Pharmacokinetic data needs to support risk assessments for inhaled and ingested manganese. Neurotoxicology 20:161-

171.

Anthony, J. S., Zamel, N., and Aberman, A. (1978). Abnormalities in pulmonary function after brief exposure toxic metal fumes. Can. Med. Assoc. J. 586-588.

Antilla, S. (1986). Dissolution of stainless steel welding fumes in the rat lung: an x-ray microanalytical study. Br. J. Ind. Med. 43:592-596.

Antonini, J. M., Krishna Murthy, G. G., Rogers, R. A., Albert, R., Ulrich, G. D., and Brain, J. D. (1996). Pneumotoxicity and pulmonary clearance of different welding fumes after intratracheal instillation in the rat. Toxicol. Appl. Pharmacol. 140:188-199.

Antonini, J. M., Krishna Murthy, G. G., and Brain, J. D. (1997). Responses to welding fumes: lung injury, inflammation, and the release of tumor necrosis factor-alpha and interleukin-1ß. Exp. Lung Res. 23:205-227.

Antonini, J. M., Clarke, R. W., Krishna Murthy, G. G., Sreekanthan, P., Jenkins, N., Eagar, T. W., and Brain, J. D. (1998). Freshly generated stainless steel welding fume induced greater lung inflammation in rats as compared to aged fumes. Toxicol. Lett. 98:77-86.

Antonini, J. M., Lawryk, N. J., Krishna Murthy, G. G., and Brain, J. D. (1999). Effect of welding fume solubility on lung macrophage viability and function in vitro. J. Toxicol. Environ. Health 58:343-363.

Antonini, J. M., Ebeling, A. R., and Roberts, J. R. (2001). Highly soluble stainless steel welding fume slows the pulmonary clearance of a bacterial pathogen and severely damages the lungs after infection. Toxicol. Sci. 60:424.

Antti-Poika, M., Hassi, J., and Pyy, L. (1977). Respiratory diseases in arc welders. Int. Arch. Occup. Environ. Health 40:225-230.

Aschner, M. and Gannon, M. (1994). Manganese (Mn) transport across the rat blood-brain barrier: saturable and transferrin-dependent transport mechanisms. Brain Res. Bull. 33:345-349.

Aschner, M., Vrana, K. E., and Zheng, W. (1999). Manganese uptake and distribution in the central nervous system. Neurotoxicology 20:173-180.

Attfield, M. D. and Ross, D. S. (1978). Radiological abnormalities in electric arc welders. Br. J. Ind. Med. 35:117-122.

Baker, R. S. U., Arlauskas, A., Tandon, R. K., Crisp, P. T., and Ellis, J. (1986). Toxic and genotoxic action of electric arc welding fumes on cultured mammalian cells. J. Appl. Toxicol. 6:357-362.

Barbeau, A., Inoue, N., and Cloutier, T.(1976). Role of manganese in dystonia. Adv. Neurol. 14:339-352.

Barhad, B., Teculescu, D., and Craciun, O. (1975). Respiratory symptoms, chronic bronchitis,

and ventilatory function in shipyard welders. Int. Arch. Occup. Environ. Health 36:137-150.

Beach, J. R., Dennis, J. H., Avery, A. J., Bromly, C. L., Ward, R. J., Walters, E. H., Stenton, S. C., and Hendrick, D. J. (1996). An epidemiologic investigation of asthma in welders. Am. J. Respir. Crit. Care Med. 154:1394-1400.

Beaumont, J. J.(1980). Mortality of welders, shipfitters, and other metal trade workers in Boilermakers' Local No. 104. Thesis. Seattle, University of Washington, pp 158.

Beaumont, J. J. and Weiss, N. S. (1981). Lung cancer among welders. J. Occup. Med. 23:839-844.

Becker, N., Claude, J., and Frentzel-Beyme, R. (1985). Cancer risks of arc welders to fumes containing chromium and nickel. Scand. J. Work Environ. Health 11:75-85.

Becker, N. (1999). Cancer mortality among arc welders exposed to fumes containing chromium and nickel. J. Occup. Environ. Med. 41:294-303.

Beckett, W. S. (1996a). Welding. In *Occupational and Environmental Disease* (Harber, P., Schenker, M. B., and Balmes, J. R., Eds.), Mosby-Year Book, Inc., St. Louis, MO, pp 704-717.

Beckett, W. S., Pace, P. E., Sferlazza, S. J., Perlman, G. D., Chen, A. H., and Xu, X. P. (1996b). Airway reactivity in welders: a controlled prospective cohort study. J. Occup. Environ. Med. 38:1229-1238.

Berg, N. O., Berlin, M., Bohgard, M., Rudell, B., Schutz, A., and Warvinge, K. (1987). Bronchocarcinogenic properties of welding and thermal spraying fumes containing chromium in the rat. Am. J. Ind. Med. 11:39-54.

Biggart, N. W., Rinehart, R. R., and Verfaille, J. (1987). Evidence for the presence of mutagenic compounds other than chromium in particles from mild steel welding. Mutat. Res. 180:55-65.

Billings, C. G. and Howard, P. (1993). Occupational siderosis and welders' lung: a review. Monaldi Arch. Chest Dis. 48:304-314.

Blanc, P., Wong, H., Bernstein, M. S., and Boushey, H. A. (1991). An experimental human model of metal fume fever. Ann. Intern. Med. 114:930-936.

Blanc, P., Boushey, H.A., Wong, H., Wintermeyer, S. F., and Bernstein, M. S. (1993). Cytokines in metal fume fever. Am. Rev. Respir. Dis. 147:134-138.

Bonde, J. P. (1990). Semen quality and sex hormones among mild steel and stainless steel welders: a cross sectional study. Br. J. Ind. Med. 47:508-514.

Bonde, J. P. (1992). Semen quality in welders exposed to radiant heat. Br. J. Ind. Med. 49:5-10.

Bonde, J. P. and Ernst, E. (1992). Sex hormones and semen quality in welders exposed to

hexavalent chromium. Hum. Exp. Toxicol. 11:259-263.

Boshnakova, E., Divanyan, S., Zlatarov, I., Marovsky, S. V., Kisyova, K., Zanev, D., Karev, G., and Marinova, T. Z. (1989). Immunological screening of welders. J. Hyg. Epidemiol. Microbiol. Immunol. 33:379-382.

Boulet, L. P., Laviolette, M., Cote, J., Boulet, M., Milot, J., Cartier, A., Dugas, M., Leblanc, C., and Malo, J. L. (1992). Airway inflammation in occupational asthma. Am. Rev. Respir. Dis. 145:A692.

Brain, J. D., Knudson, D. E., Sorokin, S. P., and Davis, M. A. (1976). Pulmonary distribution of particles given by intratracheal instillation or by aerosol inhalation. Environ. Res.11: 13-33.

Brain, J. D. (1986). Toxicological aspects of alterations of pulmonary macrophage function. Ann. Rev. Pharmacol. Toxicol. 26:547-565.

Brenneman, K. A., Cattley, R. C., Ali, S. F., and Dorman, D. C. (1999). Manganese-induced development neurotoxicity in the CD rat: is oxidative damage a mechanism of action? Neurotoxicology 20:477-488.

Brenneman, K. A., Wong, B. A., Buccellato, M. A., Costa, E. R., Gross, E. A., and Dorman, D. C. (2000). Direct Olfactory Transport of Inhaled Manganese ($^{54}MnCl_2$) to the rat brain: toxicokinetic investigations in a unilateral nasal occlusion model. Toxicol. Appl. Pharmacol. 169:238-248.

Bureau of Labor. (1999). Occupational Employment Statistics: 1999 National Occupational Employment and Wage Estimates. Available at: htttp://stats.bls.gov/oes/1999/oes514121.htm. Accessed 8-17-01.

Cabal, C., Faucon, D., and Leicaignard, J. (1988). Harmful effects of welding fumes: possible repercussions on the respiratory system: results of a study conducted in the metallurgy industry on 986 subjects. Arch. Mal. Prof. Med. Trav. Secur. Soc. 49:467-473.

Caldas, L. Q. A. and Hicks, R.(1987). Intrapulmonary pretreatment by metal fume components causing inhibition of delayed hypersensitivity. Arch. Toxicol. (Suppl. 11):223-226.

Camerino, D., Cassitto, M. G., and Gilioli, R. (1993). Prevalence of abnormal neurobehavioral scores in populations exposed to different industrial chemicals. Environ. Res. 61:251-257.

Chandra, S. V., Shukla, G. S., Srivastava, R. S., Singh, H., and Gupta, V. P. (1981). An exploratory study of manganese exposure to welders. Clin. Toxicol. 18:407-416.

Chinn, D., Stevenson, I., and Cotes, J. (1990). Longitudinal respiratory survey of shipyard workers: effects of trade and atopic status. Br. J. Ind. Med. 47:83-90.

Christensen, M. M., Ernst, E., and Ellermann-Eriksen, S. (1992). Cytotoxic effects of

hexavalent chromium in cultured murine macrophages. Arch. Toxicol. 66:347-353.

Clapp, D. E. and Owen, R. J. (1977). An investigation of potential health hazards of arc welding fume growth with time. Welding J. 56:380s-385s.

Coate, W. B. 1985. In *Toxicity of welding fumes in rats* (American Welding Society, Eds.), Miami, FL, pp. 1-25.

Coggon, D., Inskip, H., Winter, P., and Pannett, B. (1994). Lobar pneumonia: an occupational disease in welders. Lancet 344:41-43.

Cohen, M. D., Kargacin, B., Klein, C. B., and Costa, M. (1993). Mechanisms of chromium carcinogenicity and toxicity. Crit. Rev. Toxicol. 23:255-281.

Cohen, M. D., Zelikoff, J. T., Chen, L.-C., and Schlesinger, R. B. (1998). Immunotoxicologic effects of inhaled chromium: role of particle solubility and co-exposure to ozone. Toxicol. Appl. Pharmacol. 152:30-40.

Contreras, G. R., Rousseau, R., and Chan-Yeung, M. (1994). Occupational respiratory diseases in British Columbia, Canada in 1991. Occup. Environ. Med. 51:710-712.

Cooper, W. C. (1984). The implications of increased manganese in the environment resulting from the combustion of fuel additives: a review of the literature. J. Toxicol. Environ. Health 14:23-46.

Costa, M. (1991). Molecular mechanisms of nickel carcinogenesis. Annu. Rev. Pharmacol. Toxicol. 31:321-337.

Costa, M., Zhitkovich, A., Taioli, E., and Toniolo, P. (1993a). Preliminary report on a simple new assay for DNA-protein cross-links as a biomarker of exposures experienced by welders. J. Toxicol. Environ. Health 40:217-222.

Costa, M. Zhitkovich, A., and Toniolo, P. (1993b). DNA-protein cross-links in welders: molecular implications. Cancer Res. 53:460-463.

Cotes, J. E., Feinman, E. L., Male, V. J., Remie, E. S., and Wickham, C. A. G. (1989). Respiratory symptoms and impairment in shipyard welders and caulker burners. Br. J. Ind. Med. 46:292-301.

Currie, C. L. and Monk, B. E. (2000). Welding and non-melanoma skin cancer. Clin. Exp. Dermatol. 25:28-29.

Crystal, R. G. (1991). Alveolar macrophages. In *The Lung: Scientific Foundations* (Crystal, R. G. and West, J. B., Eds.), Raven Press, New York, pp. 527-538.

Dabrowski, Z., Meyer, J., and Senczuk, W. (1966a). Fertility and the morphological changes in the genital organs of rat females exposed to the action of welding fumes and gases. Ginekol. Pol. 37:845-852.

Dabrowski, Z., Meyer, J., and Senczuk, W. (1966b). Fecunolity and morphological changes in

the testes of rats exposed to welding fumes and gases. Ginekol. Pol. 37:1037-1044.

Danielsen, T. E., Langard, S., Andersen, A., and Knudsen, O. (1993). Incidence of cancer among welders of mild steel and other shipyard workers. Br. J. Ind. Med. 50:1097-1103.

Danielsen, T. E., Langard, S., and Andersen, A. (2000). Incidence of cancer among welders and other shipyard workers with information on previous work history. J. Occup. Environ. Med. 42:101-109.

Davis, J. M. (1998). Methylcyclopentadienyl manganese tricarbonyl: health risk uncertainties and research directions. Environ. Health Perspect. 106:191-201.

Doig, A. T. and McLaughlin, A. G. (1936). X-ray appearances of the lungs of electric arc welders. Lancet 1:771-775.

Doig, A. T. and McLaughlin, A. G. (1948). Clearing of x-ray shadows in welders. Lancet 1:787-791.

Doig, A. T. and Challen, P. J. R. (1964). Respiratory hazards in welding. Ann. Occup. Hyg. 7:223-231.

Donaldson, J. (1987). The physiopathological significance of manganese in brain: its relation to schizophrenia and neurodegenerative disorders. Neurotoxicology 8:451-462.

Donoghue, A. M., Glass, W. I., and Herbison, G. P. (1994). Transient changes in the pulmonary function of welders: a cross scetional study of Monday peak expiratory flow. Occup. Environ. Med. 51:553-556.

Driscoll, K. E., Costa, D. L., Hatch, G., Henderson, R., Oberdorster, G., Salem, H., and Schlesinger, R. B. (2000). Intratracheal instillation as an exposure technique for the evaluation of respiratory tract toxicity: uses and limitations. Toxicol. Sci. 55:24-35.

Dunn, J. E. and Weir, J. M. (1968). A prospective study of mortality of several occupational groups. Special emphasis on lung cancer. Arch. Environ. Health 17:71-76.

Dunn, J. E., Linden, G., and Breslow, L. (1980). Lung cancer mortality experience of men in certain occupations in California. Am. J. Public Health 50:1475-1487.

Edwards, J. O. (1975). Ozone in inorganic chemistry. In *Ozone Chemistry and Technology* (Murphy, J. and Orr, J., Eds.), Franklin Institute Press, Philadelphia, PA, pp. 187-190.

Elias, Z., Poirot, O., Baruthio, F., and Daniere, M. C. (1991). Role of solubilized chromium in the induction of morphological transformation of Syrian hamster embryo (SHE) cells by particulate chromium (VI) compounds. Carcinogenesis 12:1811-1816.

Emmett, E. A., Buncher, C. R., Suskind, R. B., and Rowe, K. W. (1981). Skin and eye diseases among arc welders and those exposed to welding operations. J. Occup. Med. 23:85-90.

Enzer, N. and Sander, O. A. (1938). Chronic lung changes in electric arc welders. J. Ind. Hyg. 20:333.

Erman, M., Raisky, E., and Potapevskiy, A. (1968). Hygienic assessment of CO_2 welding in shipyards. Automatic Weld. 21:63-67.

Ernst, E. and Bonde, J. P. (1992). Sex hormones and epidymal sperm parameters in rats following subchronic treatment with hexavalent chromium. Hum. Exp. Toxicol. 11:255-258.

Fanek, B. (1994). Manganese exposure during welding operations. Appl. Occup. Environ. Hyg. 9:537-538.

Ferin, J., Oberdorster, G., and Penney, D. P. (1992). Pulmonary retention of ultrafine and fine particles in rats. Am. J. Respir. Cell Mol. Biol. 6:535-542.

Fishman, J. B., Handrahan, J. B., Rubir, J. B., Connor, J. B., and Fine, R. E. (1985). Receptor-mediated transcytosis of transferrin across the blood-brain barrier. J. Cell Biol. 101:423A.

Fogh, A., Frost, J., and Georg, J. (1969). Respiratory symptoms and pulmonary function in welders. Ann. Occup. Hyg. 12:213-218.

Fregert, S. and Ovrum, P. (1963). Chromate in welding fumes with special reference to contact dermatitis. Acta Deramato-Venereol. 43:119-124.

Funahashi, A., Schlueter, D. P., Pintar, K., Bemis, E. L., and Siegesmund, K. A. (1988). Welder's pneumoconiosis: tissue elemental microanalysis by energy dispersive x-ray analysis. Br. J. Ind. Med. 45:14-18.

Gerin, M., Siemiatycki, J., Richardson, L., Pellerin, J., Lakhani, R., and Dewar, R. (1984). Nickel and cancer associations from a multi-center occupational exposure case-referent study. In *Nickel in the human environment*. (Sunderman, F. W., Jr., Ed.), IARC, Lyon, Scientific Publication No. 53.

Gianutsos, H., Morrow, G. R., and Morris, J. B. (1997). Accumulation of manganese in rat brain following intranasal administration. Fundam. Appl. Toxicol. 37:102-105.

Glaser, U., Hochrainer, D., Kloppel, H., and Kuhnen, H. (1985). Low level chromium (VI) inhalation effects on alveolar macrophages and immune functions in Wistar rats. Arch. Toxicol. 57:250-256.

Goller, J. W. and Paik, N. W.(1985). A comparison of iron oxide fume inside and outside of welding helmets. Am. Ind. Hyg. Assoc. J. 46:89-93.

Gordon, T., Chen, L. C., Fine, J. M., Schlesinger, R. B., Su, W. Y., Kimmel, T. A., and Amdur, M. O. (1992). Pulmonary effects of inhaled zinc oxide in human subjects, guinea pigs, rats, and rabbits. Am. Ind. Hyg. Assoc. J. 53:503-509.

Griffith, T. and Stevenson, A. C.(1989). Binder developments for stainless steel electrodes. Welding Rev. 8:192-196.

Gross, E. A., Swenberg, J. A., Fields, S., and Popp, J. A. (1982). Comparative morphometry of the nasal cavity in rats and mice. J. Anat. 135:83-88.

Guidotti, T. L., Abraham, J. L., DeNee, P. B., and Smith, J. R. (1978). Arc welders' pneumoconiosis: application of advanced scanning electron microscopy. Arch. Environ. Health 33:117-124.

Gunnarsson, L. G., Bodin, L., Soderfeldt, B., and Axelson, O. (1992). A case-control study of motor neurone disease: its relation to heritability, and occupational exposures, particularly to solvents. Br. J. Ind. Med. 49:791-798.

Haneke, E. (1973). Findings in the ejaculate of electro welders. Dermatol. Monatsschr. 159:1036-1040.

Hanig, J. P. and Herman, E. H. (1991). Toxic responses of the blood. In *Casarett and Doull's Toxicology*, 4th Edition. (Amdur, M. O., Doull, J.,, and Klassen, C. D., Eds.) Pergamon Press, New York, pp. 430-462.

Hanninen, H., Matikainen, E., Kovala, T., Valkonen, S., and Riihimaki, V. (1994). Internal load of aluminum and the central nervous system function of aluminum welders. Scand. J. Work Environ. Health 20:279-285.

Hansen, K. and Stern, R. M. (1983). *In vitro* toxicity and transformation potency of nickel compounds. Environ. Health Perspect. 51:223-226.

Hansen, K. and Stern, R. M. (1985). Welding fumes and chromium compounds in cell transformation assays. J. Appl. Toxicol. 5:306-314.

Hansen, K. and Stern, R. M. (1986). Nickel and chromium compounds and welding fumes in mammalian cell transformation bioassay in vitro. In *Biological Effects and Health Hazards of Welding Fumes and Gases* (Stern, R. M., Berlin, A., Fletcher, A., and Jarvisalo, I., Eds.) Elsevier Press, Amsterdam, pp. 305-310.

Hansen, K. S., Lauritsen, J. M., and Skytthe, A. (1996). Cancer incidence among mild steel and stainless steel welders and other metal workers. Am. J. Ind. Med. 30:373-382.

Hedenstedt, A., Jenssen, D., Lidesten, B., Ramel, C., Rannug, U., and Stern, R. M. (1977). Mutagenicity of fume particles from stainless steel welding. Scand. J. Work Environ. Health 3:203-211.

Hewitt, P. J. and Hicks, R. (1973). An investigation of the effects of inhaled welding fume in the rat. Ann. Occup. Hyg. 16:213-221.

Hicks, R., Hewitt, P. J., and Lam, H. F. (1979). An investigation of the experimental induction of hypersensitivity in the guinea pig by material containing chromium, nickle, and cobalt from arc welding fumes. Int. Arch. Energy Appl. Immunol. 59:262-265.

Hicks, R., Lam, H. F., Al-Shamma, K. J., and Hewitt, P. J. (1984). Pneumoconiotic effects of

welding-fume particles from mild steel and stainless steel deposited in the lung of the rat. Arch. Toxicol. 55:1-10.

Hicks, R. and Caldas, L. Q. A. (1986). Immunological unresponsiveness of chromium or nickel in the guinea pig induced by stainless steel welding fume components. Arch. Toxicol. (Suppl. 9):421-422.

Hobart Institute of Welding Technology. (1977). In *Pocket Welding Guide* (Hobart Brothers Co., Eds.) Troy, OH, pp. 116-135.

Hooftman, R. N., Arkesteryn, C. W. M., and Roza, P. (1988). Cytotoxicity of some types of welding fume particles to bovine alveolar macrophages. Ann. Occup. Hyg. 32:95-102.

Howden, D. G., Desmeules, M. J. A., Saracci, R., Sprince, N. L., and Herber, P. I. (1988). Respiratory hazards of welding: occupational exposure characterization. Am. Rev. Respir. Dis. 138:1047-1048.

Hudson, N. J., Evans, A. T., Yeung, C. K., and Hewitt, P. J. (2001). Effect of process parameters upon the dopamine and lipid peroxidation activity of selected MIG welding fumes as a marker of potential neurotoxicity. Ann. Occup. Hyg. 45:187-192.

Hummitzsch, W. (1960). Permissible gas concentrations during CO_2 welding. Schweissen u. Schneiden 12:274-275.

Hunnicutt, T. N., Cracovaner, D. J., and Myles. J. T. (1954). Spirometric measurements in welders. Arch. Environ. Health 8:661-669.

IARC.(1987). Overall evaluation of carcinogenicity: an updating of IARC monographs. In *IARC Monographs on the Evaluation of Carcinogenic Risks to Humans* (World Health Organization, Ed.), Geneva, pp. 165-168.

IARC.(1990). Chromium, nickel, and welding. In *IARC Monographs on the Evaluation of Carcinogenic Risks to Humans* (World Health Organization, Ed.), Geneva, pp. 447-525.

Ichinose, F., Hurford, W. E., and Zapol, W. M. (1997). Evaluation of inhaled nitric oxide in experimental models of lung injury. In *Nitric Oxide and the Lung* (Zapol, W. M. and Bloch, K. D., Eds.), Marcel Dekker, Inc., New York, pp. 251-270.

Jarnuskiewicz, I., Knapnik, A., and Kwiatkowski, B. (1966). Particle size distribution of welding fume depending on the microclimatic conditions of the welders' working places. Bull. Inst. Mar. Med. 17:73-76.

Jelnes, J. E. and Knudsen, L. E. (1988). Stainless steel welding semen quality. Reprod. Toxicol. 2:213-215.

Jirasek, L. (1979). Occupational exogenous siderosis of the skin. Contact Dermatitis 5:334-335.

Jockel, K.-H., Ahrens, W., Pohlablen, H., Bolm-Audorff, U., and Muller, K. M. (1998). Lung

cancer risk and welding: results from a case-control study in Germany. Am. J. Ind. Med. 33:313-320.

Johansson, A., Wiernik, A., Jarstrand, C., and Camner, P. (1986). Rabbit alveolar macrophages after inhalation of hexa- and trivalent chromium. Environ. Res. 39:372-385.

Kalliomaki, P.-L., Kiilunen, M., Vaaranen, V., Lakomaa, E.-L., Kalliomaki, K., and Kivela, R. (1982). Retention of stainless steel manual metal arc welding fumes in rats. J. Toxicol. Environ. Health 10:223-232.

Kalliomaki, P.-L., Kalliomaki, K., Rahkonen, E., and Aittoniemi, K. (1983a). Lung retention of welding fumes and ventilatory lung functions. A follow-up study among shipyard welders. Ann. Occup. Hyg. 24:449-452.

Kalliomaki, P.-L., Lakomaa, E.-L., Kalliomaki, K., Kiilunen, M., Kivela, R., and Vaaranen, V. (1983b). Stainless steel manual metal arc welding fumes in rats. Br. J. Ind. Med. 40:229-234.

Kalliomaki, P.-L., E.-L., Junttila, M.-L., Kalliomaki, K., Lakomaa, E.-L., and Kivela, R. (1983c). Comparison of the behavior of stainless steel and mild steel manual metal arc welding fumes in rat lung. Scand. J. Work Environ. Health 9:176-180.

Kandracova, E. (1981). Fertility disorders in welders. Cesk. Dermatol. 56:342-345.

Keimig, D., Pomrehin, P. R., and Burmeister, L. F. (1983). Respiratory symptoms and pulmonary function in welders of mild steel: a cross-sectional study. Am. J. Ind. Med. 4:489-499.

Kennedy, S. M. (1994). When is a disease occupational? Lancet 344:4-5.

Kilburn, K. H., Warshaw, R., Boylen, C. T., Thornton, J. C., Hopfer, S. M., Sunderman, F. W., and Finklea, J. (1990). Cross-shift and chronic effects of stainless steel welding related to internal dosimetry of chromium and nickel. Am. J. Ind. Med. 17:607-615.

Kimbell, J. S., Godo, M. N., Gross, E. A., Joyner, D. R., Richardson, R. B., and Morgan, K. T. (1997). Computer simulation of inspiratory airflow in all regions of the F344 rat nasal passages. Toxicol. Appl. Pharmacol. 145:388-398.

Kleinfeld, M., Messite, J., Kooyman, O., and Spiro, J. (1969). Welders' siderosis: a clinical roentgenographic and physiological study. Arch. Environ. Health 19:70-73.

Kominsky, J. R. and Tanaka, S. (1976). Health hazard evaluation determination report number 76-16-336, Abex Corporation, Pueblo, Colorado. National Institute of Occupational Safety and Health, Cincinnati, OH.

Lam, H. F., Hewitt, P. J., and Hicks, R.(1979). A study of pulmonary deposition, and the elimination of some constituent metals from welding fume in laboratory animals. Ann. Occup. Hyg. 21:363-373.

Langard, S. (1993). Role of chemical species and exposure characteristics in cancer among persons occupationally exposed to chromium compounds. Scand. J. Work Environ. Health 19:81-89.

Langard, S. (1994). Nickel-related cancer in welders. Sci. Total Environ. 148:303-309.

Lauwerys, R. R. (1989). Metals- epidemiological and experimental evidence for carcinogenicity. Arch. Toxicol. 13:21-27.

Lerchen, M. L., Wiggins, C. L., and Samet, J. L. (1987). Lung cancer among and occupation in New Mexico. J. Natl. Cancer Inst. 79:639-644.

Liss, G. M. (1985). In *Health Effects of Welding and Cutting Fume*. (Ontario Ministry of Labour, ed.), Toronto.

Liss, G. M. (1996). In *Health Effects of Welding and Cutting Fume- an Update.* (Ontario Ministry of Labour, ed.), Toronto.

Lucchini, R., Apostoli, P., Perrone, C., Placidi, D., Albini, E., Migliorati, P., Mergler, D., Sassine, M.-P., Palmi, S., and Alessio, L. (1999). Long term exposure to "low levels" of manganese oxides and neurofunctional changes in ferro-alloy workers. Neurotoxicology 20:287-298.

MacDonald, E.J. (1976). Epidemiology of skin cancer. In *Neoplasms of the Skin and Malignant Melanoma: A Collection of Papers Presented at the 20th Annual Clinical Conference on Cancer*. Year Book Medical Publishers: Chicago, pp. 27-42.

Maizlish, N., Beaumont, J., and Singleton, J. (1988). Mortality among California highway workers. Am. J. Ind. Med. 13:363-379.

Marek, K. and Starzynski, Z. (1994). Pneumoconioses in Poland. Int. J. Occup. Med. Environ. Health 7:13-21.

Maxild, J., Andersen, M., Kiel, P., and Stern, R. M. (1978). Mutagenicity of fume particles from metal arc welding on stainless steel in the salmonella/microsome test. Mutat. Res. 56: 235-243.

McMillan, G. H. G. and Heath, J. (1979). The health of welders in naval dockyards: acute changes in respiratory function during standardized welding. Ann. Occup. Hyg. 22:19-32.

McMillan, G. H. G. and Plethybridge, R J.(1984). A clinical radiological and pulmonary case-control study of 135 dockyard welders aged 45 years and over. J. Soc. Occup. Med. 34:3-23.

Menck, H. R. and Henderson, B. E. (1976). Occupational differences in rates of lung cancer. J. Occup. Med. 18:797-801.

Meredith, S. (1993). Reported incidence of occupational asthma in the United Kingdom, 1989-

1990. J. Epidemiol. Community Health 47:459-463.

Migai, K. V. and Norkin, Y. N. (1965). The biological action of electric welding dusts and gases formed in the welding of special steels using chrome-nickel electrodes. Nauch Raboty Inst. Okhrany Tr. Vses. Tsentr. Sovet Prof. Syuzov 2: 45-53.

Milham, S. (1985). Mortality in workers exposed to electromagnetic fields. Environ. Health Perspect. 62:297-300.

Molina, R. M., Donaghey, T. C., Goletiani, H., Knutson, M. D., Kim, H., and Brain, J. D. (2000). Effects of iron status on pharmacokinetics of instilled $^{54}MnCl_2$ in rats. Am. J. Respir. Crit. Care Med. 161:A173.

Moreton, J. (1977). The generation and control of welding fume. In *Bibliography: Particulate Fume and Pollutant Gases in the Welding Environment* (The Welding Institute Publication, Ed.), Publication 5510/19/77, Cambridge, England, p. 74.

Morgan, W. K. C. (1962). Arc welders' lung complications by conglomeration. Am. Rev. Respir. Dis. 85:570-575.

Morgan, W. K. C. and Kerr, H. D. (1963). Pathologic and physiologic studies of welders' siderosis. Ann. Intern Med. 58:293-304.

Morgan, W. K. C. (1989). On welding, wheezing, and whimsy. Am. Ind. Hyg. Assoc. J. 50:59-69.

Mortensen, J. T. (1988). Risk for reduced sperm quality among welders workers, with special reference to welders. Scand. J. Work Environ. Health 14:27-30.

Moulin, J. J., Wild, P., Haguenoer, J. M., Faucon, D., DeGaudemaris, R., Mur, J. M., Mereau, M., Gary, Y., Toamain, J. P., Birembaut, Y., et al. (1993). A mortality study among mild steel and stainless steel welders. Br. J. Ind. Med. 50: 234-243.

Moulin, J. J. (1997). A meta-analysis of epidemiologic studies of lung cancer in welders. Scand. J. Work Environ. Health 23:104-113.

Mur, J. M., Teculescu, D., Pham, Q. T., Gaertner, M., Massin, N., Meyer-Bisch, C., Moulin, J. J., Diebold, F., and Pierre, F. (1985). Lung function and clinical findings in a cross-sectional study of arc welders: an epidemiological study. Int. Arch. Occup. Environ. Health 57:1-18.

Naslund, P.-E., Andreasson, S., Bergstrom, R., Smith, L., and Risberg, B. (1990). Effects of exposure to welding fume: an experimental study in sheep. Eur. Resp. J. 3:800-806.

Naslund, P.-E. and Hogstedt, P. (1982). Welding and bronchitis. Eur. J. Respir. Dis. 63:69-72.

Nelson, K., Golnick, J., Korn, T., and Angle, C. (1993). Manganese encephalopathy: Utility of early magnetic resonance imaging. Br. J. Ind. Med. 50:510-513.

Nemacova, A. (1984). Hygiene of cutting and resistance seam welding technologies. Zyaranie

33:202-205.

Nemacova, A. (1985). Toxicity of the gas phase in welding fumes. Zvaracske Spravy 35:10-17.

Newhouse, M. L., Oakes, D., and Wooley, A. J. (1985). Mortality of welders and other craftsmen at a shipyard in Northeast England (UK). Br. J. Ind. Med. 42:406-410.

Niebuhr, E., Stern, R. M., Thomsen, E., and Wulf, H. C. (1981). Genotoxicity of nickel welding fumes assayed with sister chromatid exchange in human blood cells in culture. Ann. Clin. Lab. Sci. 11:85-86.

NIOSH (1977). In *Criteria for a Recommended Standard. Occupational Exposure to Inorganic Nickel* (U. S. Department of Health and Human Services, Public Health Service, Centers for Disease Control, and National Institute of Occupational Safety and Health, Eds.), Publication No.77-164.

NIOSH (1988). National occupational exposure survey data base, 1981-1983. In *NIOSH Criteria for Recommended Standard for Welding, Brazing, and Thermal Cutting* (U. S. Department of Health and Human Services, Public Health Service, Centers for Disease Control, and National Institute of Occupational Safety and Health, Eds.), Publication No.88-10.

Oberdorster, G., Ferin, J., Gelein, R., Soderholm, S. C., and Finkelstein, J. (1992). Role of alveolar macrophage in lung injury: studies with ultrafine particles. Environ. Health Perspect. 97:193-197.

Oberdorster, G., Gelein, R. M., Ferin, J., and Weiss, B. (1995). Association of particle air pollution and acute mortality: involvement of ultrafine particles? Inhal. Toxicol. 7:111-124.

O'Donnell, T. V. (1995). Asthma and respiratory problems: a review. Sci. Total Environ. 163 (1-3):137-145.

Ohshiro, H., Nose, T., Sugiyama, K., Meshitsuka, S., Kurozawa, Y., Kuranobu, M., Funakawa, K., Yamasaki, and Kinosita, K. (1988). A case study of acute cadmium poisoning by welding work. Jap. J. Ind. Health 30:210-211.

Oxhoj, H., Bake, B., Wedel, H., and Wilhelmsen, L.(1979). Effects of electric arc welding on ventilatory function. Arch. Environ. Health 24:211-217.

Palmer, W. (1989). In *Effects of Welding on Health- VII.* (American Welding Society, eds., Vol. VII), Miami, FL.

Palmer, W. G. and Eaton, J. C. (1998). In *Effects of Welding on Health- X.* (American Welding Society, eds., Vol. X), Miami, FL.

Palmer, W. G. and Eaton, J. C. (2001). In *Effects of Welding on Health- XI.* (American Welding Society, eds., Vol. XI), Miami, FL.

Pantucek, M. (1971). Influence of filler materials on air contamination in manual electric arc welding. Am. Ind. Hyg. Assoc. J. 32:687-692.

Pasanen, J. T., Gustafsson, T. E., Kalliomaki, P., and Tossavainen, A. (1986). Cytotoxic effects of four types of welding fumes *in vitro*: a comparative study. J. Toxicol. Environ. Health 18:143-152.

Pattee, H. E., Myers, L. B., Evans, R. M., and Monroe, R. E. (1973). Effects of Arc Radiation and Heat on Welders. Weld. J. 52:297-308.

Patwardhan, J. R. and Finch, E. S. (1976). Fatal cadmium fume pneumonitis. Med. J. Aust. 29:962-964.

Peto, C. (1986). Cancer morbidity and mortality studies of welders. In *Health Hazards and biological effects of welding fumes and gases*. (Stern, R. M., Fletcher, A. C., Eds.) Excerpta Medica, Amsterdam, pp. 423-34.

Popp, W., Vahrenholz, C., Schmieding, W., Krewet, E., and Norpoth, K. (1991). Investigations of the frequency of DNA strand breaks and cross-linking and of sister chromatid exchange in the lymphocytes of electric welders exposed to chromium- and nickel-containing fumes. Int. Arch. Occup. Environ. Health 63:115-120.

Racette, B.A., McGee-Minnich, L., Moerlein, S.M., Mink, J.W., Videen, T.O., and Perlmutter, J.S. (2001). Welding-related parkinsonism: clinical features, treatment, and pathophysiology. Neurology 56:8-13.

Rasmussen, K. H. and Jepsen, J. R. (1987). The organic psychosyndrome in manual metal arc welders: a possible consequence of manganese toxicity. Ugeskr Laeg 149:3497-3498.

Reasor, M. J. and Antonini, J. M. (2001). Pulmonary responses to single versus multiple intratracheal instillations of silica in rats. J. Toxicol. Environ. Health 62:9-21.

Reuzel, P. G. J., Beems, R. B., DeRaat, W. K., and Lohman, P. H. M. (1986). Carcinogenicity and *in vitro* genotoxicity of the particulate fraction of two stainless steel welding fumes. In *Proceedings of the International Conference on Health Hazards and Biological Effects of Welding Fumes and Gases.* (Stern, R. M., Berlin, A., Fletcher, A. C., and Jarvisalo, J., Eds.) Excerpta Medica, New York, pp. 329-332.

Roesler, J. A. and Woitowiltz, H. J. (1996). Welder's siderosis progressing to interstitial pulmonary fibrosis after ongoing exposure to welding fumes. Eur. Resp. J. Suppl. 9:220S.

Schreider, J. P.(1983). Nasal airway anatomy and inhalation deposition in experimental animals and people. In *Nasal Tumors in Animals and Man, Vol. III, Experimental Nasal Carcinogenesis.* (Reznik, G. and Stinson, S. F., Eds.) CRC Press, Boca Raton, FL, pp. 1-25.

Sferlazza, S. J. and Beckett, W. S. (1991). The respiratory health of welders. Am. Rev. Respir. Dis. 143:1134-1148.

Shehade, S. A., Roberts, P. J., Diffey, B. L., and Foulds, I. S. (1987). Photodermatitis due to spot welding. Br. J. Dermatol. 117:117-119.

Silberschmid, M. (1986). Acute pneumonitis progressing to pulmonary fibrosis in a welder. In *Health Hazards and Biological Effects of Welding Fumes and Gases.* (Stern, R. M., Berlin, A., and Jarvisalo, J., Eds.) Elsevier Science Publishing, Amsterdam, pp. 415-418.

Simonato, L., Fletcher, A. C., Andersen, A., Andersen, K., Becker, N., Chang-Claude, J., Ferro, G., Gerin, M., Gray, C. N., Hansen, K. S., et al. (1991). A historical prospective study of European stainless steel, mild steel, and shipyard welders. Br. J. Ind. Med. 48:145-154.

Simonsson, B. G., Nielsen, J., Karlsson, S.-E., Horstman, V., Kronholm-Diab, K., and Skerfving, S. (1995). A prospective study on bronchial responsiveness in newly employed workers exposed to substances potentially harmful to the airways. Eur. Resp. J. 8:194S.

Sjogren, B. (1980). A retrospective cohort study of mortality among stainless steel welders. Scand. J. Work Environ. Health 6:197-200.

Sjogren, B., Gustavsson, A., and Hedstrom, L. (1987). Mortality in two cohorts of welders exposed to high- and low-levels of hexavalent chromium. Scand. J. Work Environ. Health 13:247-251.

Sjogren, B., Gustavsson, P., and Hogstedt, C. (1990). Neuropsychiatric symptoms among welders exposed to neurotoxic metals. Br. J. Ind. Med. 47:704-707.

Sjogren, B., Stragis Hansen, K., Kjuus, H., and Persson, P.-G. (1994). Exposure to stainless steel welding fumes and lung cancer: a meta-analysis. Occup. Environ. Med. 51:335-336.

Sjogren, B., Iregren, A., Frech, W., Hagman, M., Johansson, L., Tesarz, M., and Wennberg, A. (1996). Effects of the nervous system among welders exposed to aluminum and manganese. Occup. Environ, Med. 53:32-40.

Smith, R.P. (1991). Toxic responses of the blood. In *Casarett and Doull's Toxicology*, 4th Edition. (Amdur, M. O., Doull, J., and Klassen, C. D., Eds.) Pergamon Press, New York, pp. 257-281.

Sobaszek, A., Boulenguez, C., Frimat, P., Robin, H., Haguenoer, J. M., and Edme, J.-L. (2000). Acute respiratory effects of exposure to stainless steel and mild steel welding fumes. J. Occup. Environ. Med. 42:923-931.

Sreekanthan, P.(1997). Study of chromium in welding fume. Dissertation. Massachusetts Institute of Technology, Boston, MA.

Stavert, D. M., Archuleta, D. C., Behr, M. J., and Lehnert, B. E. (1991). Relative acute toxicities of hydrogen fluoride, hydrogen chloride, and hydrogen bromide in nose- and

pseudo-mouth breathing rats. Fundam. Appl. Toxicol. 16:636-655.

Steel. J. (1968). Respiratory hazards in shipbuilding and ship repairing. Ann. Occup. Hyg. 11:115-121.

Steenland, K., Beaumont, J., and Elliot, L. (1991). Lung cancer in mild steel welders. Am. J. Epidemiol. 133:220-229.

Sterling, T. D. and Wenkham, J. J. (1976). Smoking characteristics by type of employment. J. Occup. Med. 18:743-754.

Stern, R. M. (1977). A chemical, physical, and biological assay of welding fumes. The Danish Welding Institute Publication 77.05.

Stern, R. M. (1981). Process-dependent risk of delayed health effects for welders. Environ. Health Perspect. 41:235-53.

Stern, R. M. (1983). Assessment of risk of lung cancer for welders. Arch. Environ. Health 39:148-155.

Stern, R. M. and Pigott, G. M. (1983). *In vitro* RPM fibrogenic potential assay of welding fumes. Environ. Health Perspect. 51:231-236.

Stern, R. M., Hansen, K., Masden, A. F., and Olsen, K. M. (1988). *In vitro* toxicity of welding fumes and their constituents. Environ. Res. 46:168-180.

Strickland, D., Smith, S. A., Dolliff, G., Goldman, L., and Roelofs, R. I. (1996). Amyotrophic lateral sclerosis and occupational history: a pilot case-control study. Arch. Neurology 53:730-733.

Sulotto, F., Romano, C., Piolatto, G., Chisea, A., Capellaro, E., and Discalzi, G. (1989). Respiratory impairment and exposure to metals in a group of 68 welders at work. Medicina del Lavoro 80:201-210.

Tas, S., Lauwerys, R., and Lison, D. (1996). Occupational hazards for the male reproductive system. Crit. Rev. Toxicol. 26:261-307.

Tierney, M. P. (1977). Analysis of mine injuries associated with maintenance and repair in metal and non-metal mines. U. S. Dept. of the Interior, Mining Enforcement and Safety Administration.

Toren, K. (1996). Self-reported rate of occupational asthma in Sweden, 1990-1992. Occup. Environ. Med. 53:757-761.

Townsend, R. H. (1968). A case of acute cadmium pneumonitis: lung function tests during a four-year follow-up. Br. J. Ind. Med. 25:68-71.

Tsuchihana, Y., Koike, S., and Ohmoir, K. (1988). Carbon monoxide exposure of CO_2-arc welding workers. Jap. J. Ind. Health 30:280-281.

Tsyrkunov, L.P. (1981). Skin diseases in electric welders. Vestn. Dermatol. Venerol. 10:40-43.

Tuschl, H., Weber, E., and Kovac, R. (1997). Investigations on immune parameters in welders. J. Appl. Toxicol. 17:377-383.

Uemitsu, N., Shimizu, Y., Hosokawa, H., et al. (1984). Inhalation toxicity study of welding fumes: effect of single or repeated exposure on the lungs of rats. Toxicol. 30:75-92.

Villaume, J. E., Wasti, K., Liss-Suter, D., and Hsiao, S. (1979). In *Effects of Welding on Health.* (American Welding Society, eds., Vol. I), Miami, FL.

Vogelmeier, C., Konig, G., Benze, K., and Fruhmann, G. (1987). Pulmonary involvement in zinc fume fever. Chest 92:946-948.

Walrath, J., Rogot, E., Murray, J., and Blair, A. (1985). In *Mortality patterns among U.S. veterans by occupation and smoking status*. (U.S. Government Printing Office, Eds.), Washington, D.C., NIH Publication No. 85-2756:54.

Wang, Z. P., Larsson, K., Malmberg, P., Sjogren, B., Hallberg, B. O., and Wrangskog, K. (1994). Asthma,, Lung function, and bronchial responsiveness in welders. Am. J. Ind. Med. 26:741-754.

Weiler, K.J.(1979). Nickel contact eczema caused by electric welding? Derm. Beruf. Umweldt. 27:142-143.

Wergeland, E. and Iversen, B. G. (2001). Deaths from pneumonia after welding. Scand. J. Work Environ. 27:353.

White, L. R., Jakobsen, K., and Ostgaard, K. (1979). Comparative toxicity of chromium-rich welding fumes and chromium on an established human cell line. Environ. Res. 20:366-374.

White, L. R., Hunt, J., Tetley, T. D., and Richards, R. J. (1981). Biochemical and cellular effects of welding fume particles in the rat lung. Ann. Occup. Hyg. 24:93-101.

White, L. R., Hunt, J., Richards, R. J., and Eik-Nes, K. B. (1982). Biochemical studies of rat lung following exposure to potassium dichromate or chromium-rich welding fume particles. Toxicol. Lett. 11:159-163.

Wu, W., Zhang, Y., and Zhang, F.(1996). Studies on semen quality in workers exposed to manganese and electric welding. Chinese J. Prev. Med. 30:266-268.

Yamamoto, S., Katagiri, K., Ando, M., and Chen, X.-Q. (2001). Suppression of pulmonary antibacterial defense mechanisms and lung damage in mice exposed to fluoride aerosol. J. Toxicol. Environ. Health 62:485-494.

Yu, I. J., Kim, K. J., Chang, H. K., Song, K. S., Han, K. T., Han, J. H., Maeng, S. H., Chung, Y. H., Park, S. H., Chung, K. H., Han, J. S., and Chung, H. K. (2000). Pattern of deposition of stainless steel welding fume particles inhaled into the respiratory systems of Sprague-Dawley rats exposed to a novel welding fume generating system. Toxicol. Lett. 116:103-

111.

Yu, I. J., Song, K. S., Chang, H. K., Han, J. H., Kim, K. J., Chung, Y. H., Maeng, S. H., Park, S. H., Han, K. T., Chung, K. H., and Chung, H. K. (2001). Lung fibrosis in Sprague-Dawley rats induced by exposure to manual metal arc-stainless steel welding fumes. Toxicol. Sci. 63:99-106.

Zakhari, S. and Anderson, R. S.(1981). In *Effects of Welding on Health- II.* (American Welding Society, eds., Vol. II), Miami, FL.

Zimmer, A.T. and Biswas, P. (2001). Characterization of the aerosols resulting from arc welding processes. J. Aerosol Sci. 32:993-1008.

Zober, A., Schaller, K. H., and Weltle, D. (1984). Inhalative load and stress of TIG-welders by chromium-nickel additives. Staub-Reinhalt. Luft. 44:465-468.

Zober, A. and Weltle, D. (1985). Cross-sectional study of respiratory effects of arc welding. J. Soc. Occup. Med. 35:79-84.

APPENDIX A: ABBREVIATIONS

-Ni_3S_2 = nickel subsulfide
ALS = amyotrophic lateral sclerosis; Lou Gehrig's Disease
$BaCrO_4$ = barium chromate
BHK = baby hamster kidney cells
CO = carbon monoxide
CO_2 = carbon dioxide
$CaCO_3$ = calcium carbonate; lime
Cr^{+6} = hexavalent chromium
Cr^{+3} = trivalent chromium
FCAW = flux-cored arc welding
FSH = follicle-stimulating hormone
GMAW = gas metal arc welding
GTAW = gas tungsten arc welding
IARC = International Agency for Research on Cancer
IL = interleukin
K_2CrO_4 = potassium chromate
$K_2Cr_2O_7$ = potassium dichromate
LH = luteinizing hormone
MIG = metal inert gas welding
MMAW = shielded manual metal arc welding
MRI = magnetic resonance imaging
MS = mild steel
$NaCrO_4$ = sodium chromate
$Na_2Cr_2O_7$ = sodium dichromate
NIOSH = National Institute for Occupational Safety and Health
NO = nitric oxide
NO_2 = nitrogen dioxide
O_2 = oxygen
O_3 = ozone
OSHA = Occupational Safety and Health Administration
PEF = peak expiratory flow
SAW = submerged arc welding
SHE = Syrian hamster embryo cells
SS = stainless steel
TIG = tungsten inert gas welding
TLV-TWA = threshold limit value- time weighted average
TNF- = tumor necrosis factor-